SECTION MT
MANUAL TRANSAXLE

CONTENTS

RS6F51R

PRECAUTIONS 3
Caution 3
PREPARATION 4
Special Service Tools 4
Commercial Service Tools 6
NOISE, VIBRATION AND HARSHNESS (NVH) TROUBLESHOOTING 7
NVH Troubleshooting Chart 7
MANUAL TRANSAXLE 7
DESCRIPTION 8
Cross-Sectional View 8
DOUBLE-CONE SYNCHRONIZER 9
REVERSE GEAR NOISE PREVENTION FUNCTION (SYNCHRONIZING METHOD) 9
M/T OIL 10
Changing M/T Oil 10
DRAINING 10
FILLING 10
Checking M/T Oil 10
OIL LEAKAGE AND OIL LEVEL 10
SIDE OIL SEAL 11
Removal and Installation 11
REMOVAL 11
INSTALLATION 11
POSITION SWITCH 12
Checking 12
BACK-UP LAMP SWITCH 12
NEUTRAL POSITION SWITCH 12
CONTROL LINKAGE 13
Removal and Installation of Control Device and Cable 13
AIR BREATHER HOSE 14
Removal and Installation 14
TRANSAXLE ASSEMBLY 15
Removal and Installation 15
REMOVAL 15
INSTALLATION 16
Component Parts 17
CASE AND HOUSING COMPONENTS 17
GEAR COMPONENTS 18
SHIFT CONTROL COMPONENTS 20
FINAL DRIVE COMPONENTS 21
Disassembly and Assembly 21
DISASSEMBLY 21
ASSEMBLY 25
Adjustment 32
INPUTSHAFT END PLAY 32
DIFFERENTIAL SIDE BEARING PRELOAD 33
MAINSHAFT END PLAY 34
REVERSE IDLER GEAR END PLAY 35
INPUT SHAFT AND GEARS 37
Assembly and Disassembly 37
DISASSEMBLY 37
INSPECTION AFTER DISASSEMBLY 38
ASSEMBLY 39
MAINSHAFT AND GEARS 44
Assembly and Disassembly 44
DISASSEMBLY 44
INSPECTION AFTER DISASSEMBLY 45
ASSEMBLY 47
REVERSE IDLER SHAFT AND GEARS 53
Assembly and Disassembly 53
DISASSEMBLY 53
INSPECTION AFTER DISASSEMBLY 53
ASSEMBLY 54
FINAL DRIVE 55
Assembly and Disassembly 55
PRE-INSPECTION 55
DISASSEMBLY 55
INSPECTION AFTER DISASSEMBLY 56
ASSEMBLY 56
SHIFT CONTROL 59
Inspection 59
SHIFT FORK 59
SERVICE DATA AND SPECIFICATIONS (SDS) 60
General Specifications 60
TRANSAXLE 60
FINAL GEAR 60
Gear End Play 61

Clearance Between Baulk Ring and Gear 61
3RD, 4TH, 5TH, 6TH & REVERSE BAULK RING.. 61
1ST AND 2ND DOUBLE BAULK RING 61
Available Snap Rings 61
6TH BUSHING 61
Available C-rings 62
MAINSHAFT C-RING 62
Available Thrust Washer 62
INPUT SHAFT THRUST WASHER 62
DIFFERENTIAL SIDE GEAR THRUST WASHER ... 62
Available Adjusting Shims 63
MAINSHAFT ADJUSTING SHIM 63
INPUT SHAFT REAR BEARING ADJUSTING SHIM 63
MAINSHAFT REAR BEARING ADJUSTING SHIM 63
REVERSE IDLER GEAR ADJUSTING SHIM 63
6TH MAIN GEAR ADJUSTING SHIM 64
Available Shims 64
BEARING PRELOAD 64
DIFFERENTIAL SIDE BEARING ADJUSTING SHIM (S) 64

PRECAUTIONS

PFP:00001

Caution

ECS0095I

- If manual transaxle is removed from the vehicle, always replace CSC (concentric slave cylinder). CSC insert is returned to original position to remove transaxle. Dust on clutch disc sliding parts may damage CSC seal and may cause clutch fluid leak.
- Do not reuse transaxle oil, once it has been drained.
- Check oil level or replace oil with vehicle on level ground.
- During removal or installation, keep inside of transaxle clear of dust or dirt.
- Check for the correct installation status prior to removal or disassembly. If mating marks are required, be certain they do not interfere with the function of the parts they are applied to.
- In principle, tighten bolts or nuts gradually in several steps working diagonally from inside to outside. If tightening sequence is specified, observe it.
- Be careful not to damage sliding surfaces and mating surfaces.

PREPARATION

PFP:00002

Special Service Tools

ECS0095J

Tool number Tool name		Description
KV381054S0 Puller	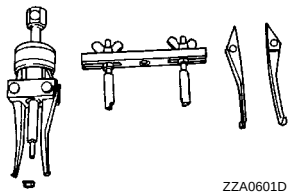	● Side bearing outer race removal ● Mainshaft front bearing removal
ST35321000 Drift a: 49 mm (1.93 in) dia. b: 41 mm (1.61 in) dia.	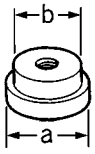	● Input shaft oil seal installation ● Reverse main gear installation ● 1st bushing installation ● 1st-2nd synchronizer hub installation ● 2nd bushing installation ● 3rd main gear installation
ST30720000 Drift a: 77 mm (3.03 in) dia. b: 55.5 mm (2.185 in) dia.	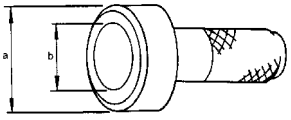	● Differential oil seal installation ● Differential side bearing outer race installation ● Mainshaft rear bearing installation ● Differential side bearing installation
ST33200000 Drift a: 60 mm (2.36 in) dia. b: 44.5 mm (1.752 in) dia.	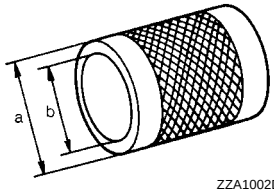	● Mainshaft front bearing installation ● 6th bushing installation ● 4th main gear installation ● 5th main gear installation ● 6th main gear installation
ST33061000 Drift a: 38 mm (1.50 in) dia. b: 28.5 mm (1.122 in) dia.	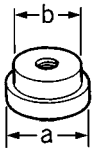	● Bore plug installation ● Differential side bearing removal
ST33052000 Drift a: 22 mm (0.87 in) dia. b: 28 mm (1.10 in) dia.	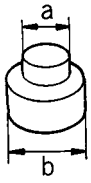	● Welch plug installation ● Input shaft rear bearing removal ● 5th bushing, thrust washer, 4th input gear, 4th gear bushing, 3rd-4th synchronizer hub and 3rd input gear removal ● Input shaft front bearing installation ● 6th input gear and 6th bushing removal ● Mainshaft rear bearing removal ● 4th main gear and 5th main gear removal ● 6th main gear removal

Tool number Tool name		Description
KV40105020 Drift a: 39.7 mm (1.563 in) dia. b: 35 mm (1.38 in) dia. c: 15 mm (0.59 in)	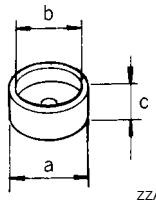 ZZA1133D	● 5th input gear and synchronizer hub removal ● 3rd main gear, 2nd main gear, 2nd bushing, 1st-2nd synchronizer hub, 1st main gear, reverse main gear and 1st bushing removal
KV40105710 Press stand a: 46 mm (1.81 in) dia. b: 41 mm (1.61 in)	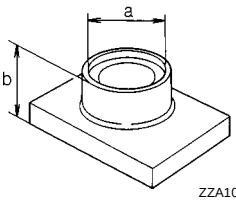 ZZA1058D	● 3rd-4th synchronizer hub installation ● 4th bushing installation ● 5th busing installation ● 5th-6th synchronizer hub installation ● 2nd bushing installation ● 3rd main gear installation
ST38220000 Press stand a: 63 mm (2.48 in) dia. b: 65 mm (2.56 in)	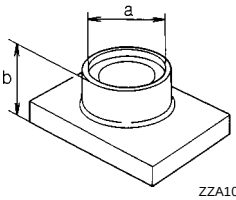 ZZA1058D	● Reverse main gear installation ● 1st bushing installation ● 1st-2nd synchronizer hub installation
ST30032000 Drift a: 80 mm (3.15 in) dia. b: 38 mm (1.50 in) dia. c: 31 mm (1.22 in) dia.	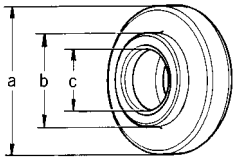 ZZA0978D	● Input shaft front bearing installation
ST30901000 Drift a: 79 mm (3.11 in) dia. b: 45 mm (1.77 in) dia. c: 35.2 mm (1.386 in) dia.	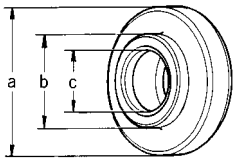 ZZA0978D	● Input shaft rear bearing installation ● 4th main gear installation ● 5th main gear installation ● 6th main gear installation ● Mainshaft rear bearing installation
ST30031000 Puller	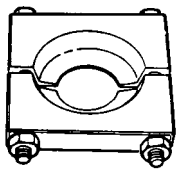 ZZA0537D	● Measuring wear of 1st and 2nd baulk ring
KV40101630 Drift a: 68 mm (2.68 in) dia. b: 60 mm (2.36 in) dia.	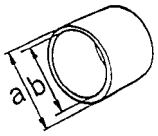 ZZA1003D	● Reverse main gear installation

Tool number Tool name	Description
KV38102510 Drift a: 71 mm (2.80 in) dia. b: 65 mm (2.56 in) dia. 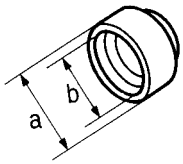 ZZA0838D	● 1st bushing installation ● 1st-2nd synchronizer hub installation ● Differential side bearing installation
KV38105900 Preload adapter 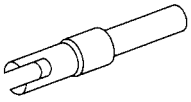 NT087	● Checking differential side gear end play

Commercial Service Tools

ECS0095K

Tool name	Description
Puller 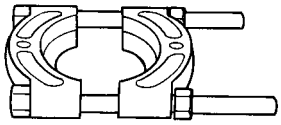 ZZB0823D	● Each bearing gear and bushing removal
Puller 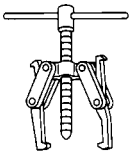 NT077	● Each bearing gear and bushing removal
Pin punch Tip diameter: 4.5 mm (0.177 in) dia. ZZA0815D	● Each retaining pin removal and installation
Power tool 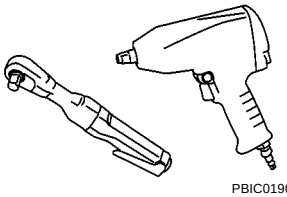 PBIC0190E	● Loosening bolts and nuts

NOISE, VIBRATION AND HARSHNESS (NVH) TROUBLESHOOTING

PFP:00003

NVH Troubleshooting Chart

ECS0095L

Use the chart below to help you find the cause of the symptom. The numbers indicate the order of the inspection. If necessary, repair or replace these parts.

MANUAL TRANSAXLE

Reference page		MT-10			MT-17	MT-17	MT-17	MT-13	MT-20	MT-20	MT-18	MT-18	MT-18	MT-18
SUSPECTED PARTS (Possible cause)		OIL (Oil level is low.)	OIL (Wrong oil.)	OIL (Oil level is high.)	GASKET (Damaged)	OIL SEAL (Worn or damaged)	O-RING (Worn or damaged)	SHIFT CONTROL LINKAGE (Worn)	CHECK PLUG RETURN SPRING AND CHECK BALL (Worn or damaged)	SHIFT FORK (Worn)	GEAR (Worn or damaged)	BEARING (Worn or damaged)	BAULK RING (Worn or damaged)	INSERT SPRING (Damaged)
Symptoms	Noise	1	2								3	3		
	Oil leakage		3	1	2	2	2							
	Hard to shift or will not shift		1	1				2					3	3
	Jumps out of gear							1	2	3	3			

DESCRIPTION

PFP:00000

Cross-Sectional View

ECS0095M

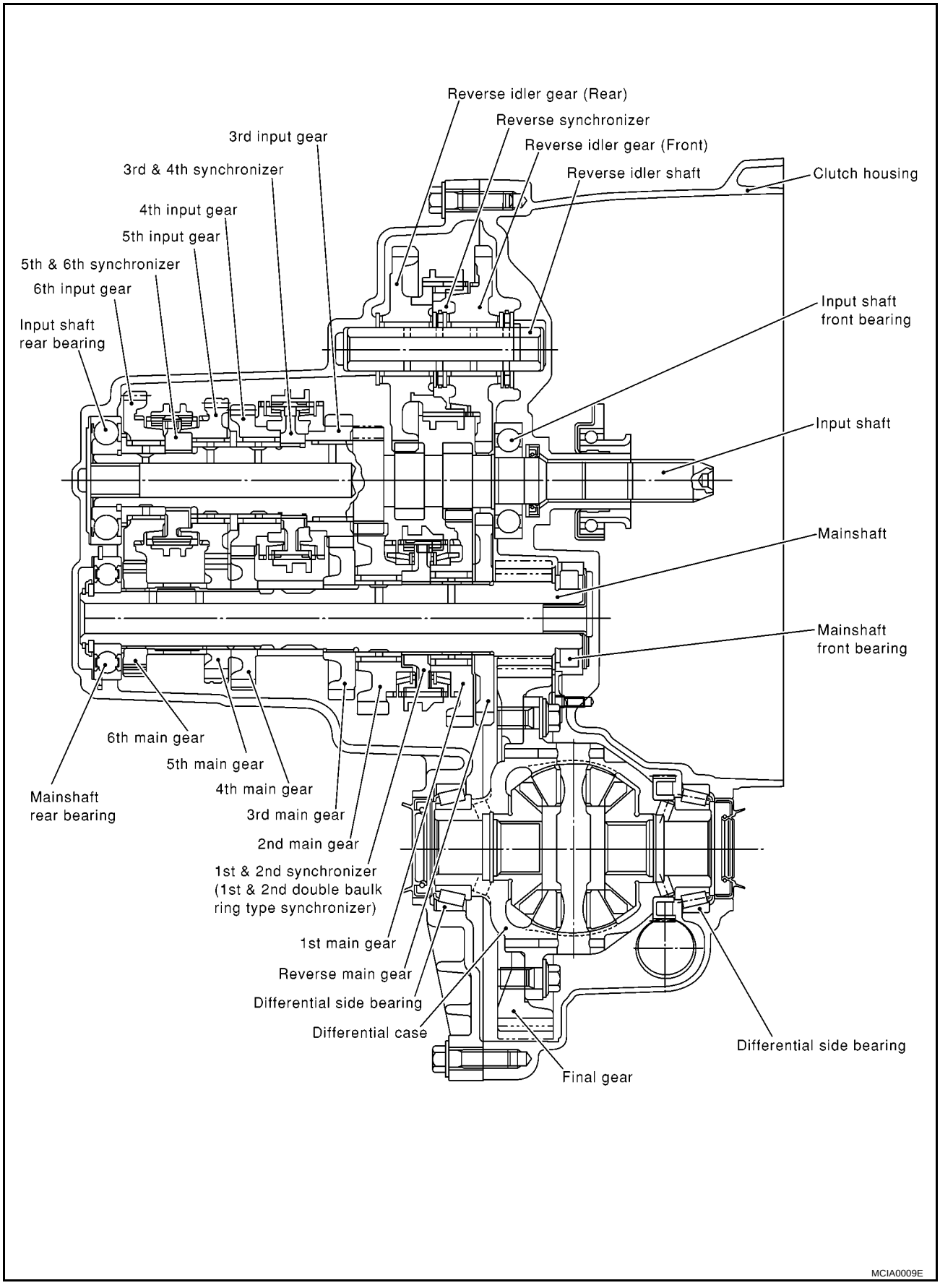

DOUBLE-CONE SYNCHRONIZER

Double-cone synchronizer is adopted for 1st and 2nd gears to reduce operating force of the shift lever.

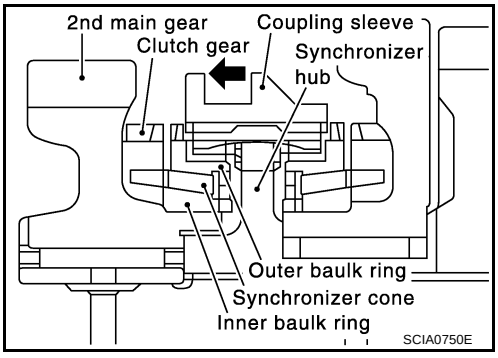

REVERSE GEAR NOISE PREVENTION FUNCTION (SYNCHRONIZING METHOD)

The gear can be matched smoothly in a structure by setting synchronizer hub, coupling sleeve, baulk ring and insert spring to reverse gear, and letting gear be synchronized.

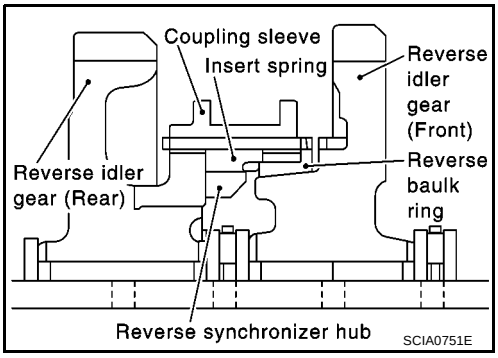

M/T OIL

PFP:KLD20

Changing M/T Oil

ECS0095N

DRAINING

1. Start the engine and let it run to warm up the transaxle.
2. Stop the engine. Remove drain plug and drain oil.
3. Set a gasket on the drain plug and install it to the transaxle.

   Drain plug:

   : 30 - 39 N·m (3.1 - 3.9 kg-m, 23 - 28 ft-lb)

   CAUTION:
   Do not reuse gasket.

FILLING

1. Remove filler plug. Fill with new oil until oil level reaches the specified limit near filler plug mounting hole.

   Oil grade : **Genuine Nissan gear oil, SAE viscosity 75w - 80 or exact equivalent**

   Capacity (reference) : **Approx. 2.3 ℓ (4 Imp pt)**

2. After refilling oil, check oil level. Assemble gasket to filler plug, then install it to transaxle body.

   Filler plug:

   : 30 - 39 N·m (3.1 - 3.9 kg-m, 23 - 28 ft-lb)

   CAUTION:
   Do not reuse gasket.

Checking M/T Oil

ECS0095O

OIL LEAKAGE AND OIL LEVEL

- Check that oil is not leaking from transaxle or around it.
- Check oil level from filler plug mounting hole as shown in the figure.

  CAUTION:
  Never start engine while checking oil level.

- Set a new gasket on the filler plug and install it on the transaxle.

  Filler plug:

  : 30 - 39 N·m (3.1 - 3.9 kg-m, 23 - 28 ft-lb)

  CAUTION:
  Do not reuse gasket.

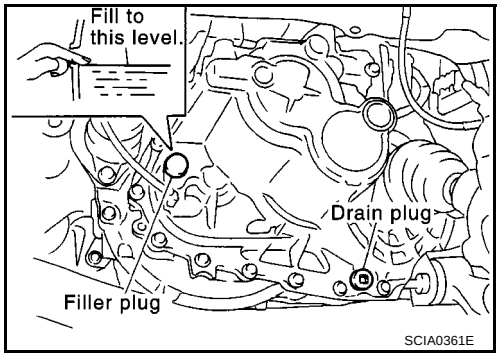

SIDE OIL SEAL

PFP:32113

Removal and Installation

ECS0095P

REMOVAL

1. Remove the drive shaft from the transaxle. Refer to AX-11, “Removal”.
2. Remove oil seal with a slotted screwdriver.

CAUTION:
Be careful not to damage the case surface when removing the oil seal.

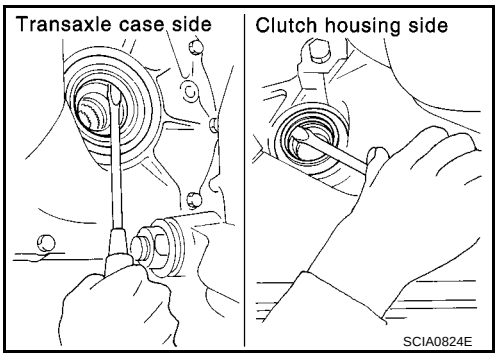

INSTALLATION

1. Using a drift (special service tool), drive the oil seal straight until it protrudes from the case end equal to dimension A shown in the figure.

Dimension A : Within 0.5 mm of flush with the case.

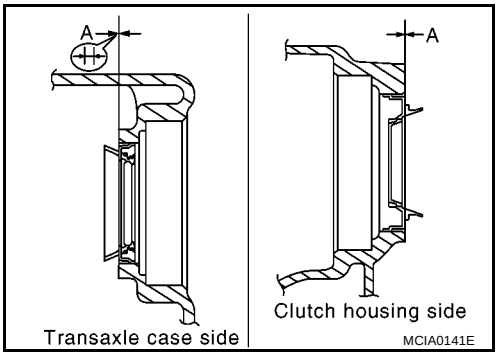

Drift to be used:

Transaxle case side	ST3072 0000
Clutch housing side	

CAUTION:
- **When installing oil seals, apply multi-purpose grease to oil seal lips.**
- **Do not reuse oil seal.**

2. Install all parts in reverse order of removal and check oil level after installation.

POSITION SWITCH

PFP:32005

Checking

ECS0095Q

BACK-UP LAMP SWITCH

- Check continuity.

Gear position	Continuity
Reverse	Yes
Except reverse	No

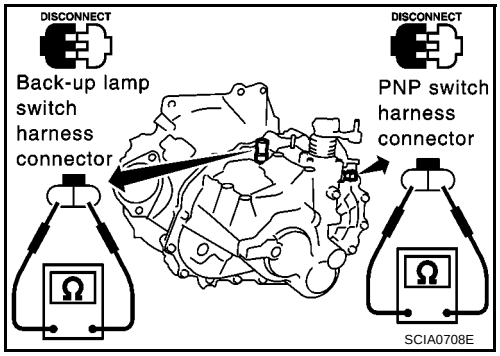

NEUTRAL POSITION SWITCH

- Check continuity.

Gear position	Continuity
Neutral	Yes
Except neutral	No

CONTROL LINKAGE

PFP:34103

Removal and Installation of Control Device and Cable

ECS0095R

Refer to the figure for removal and installation procedure.

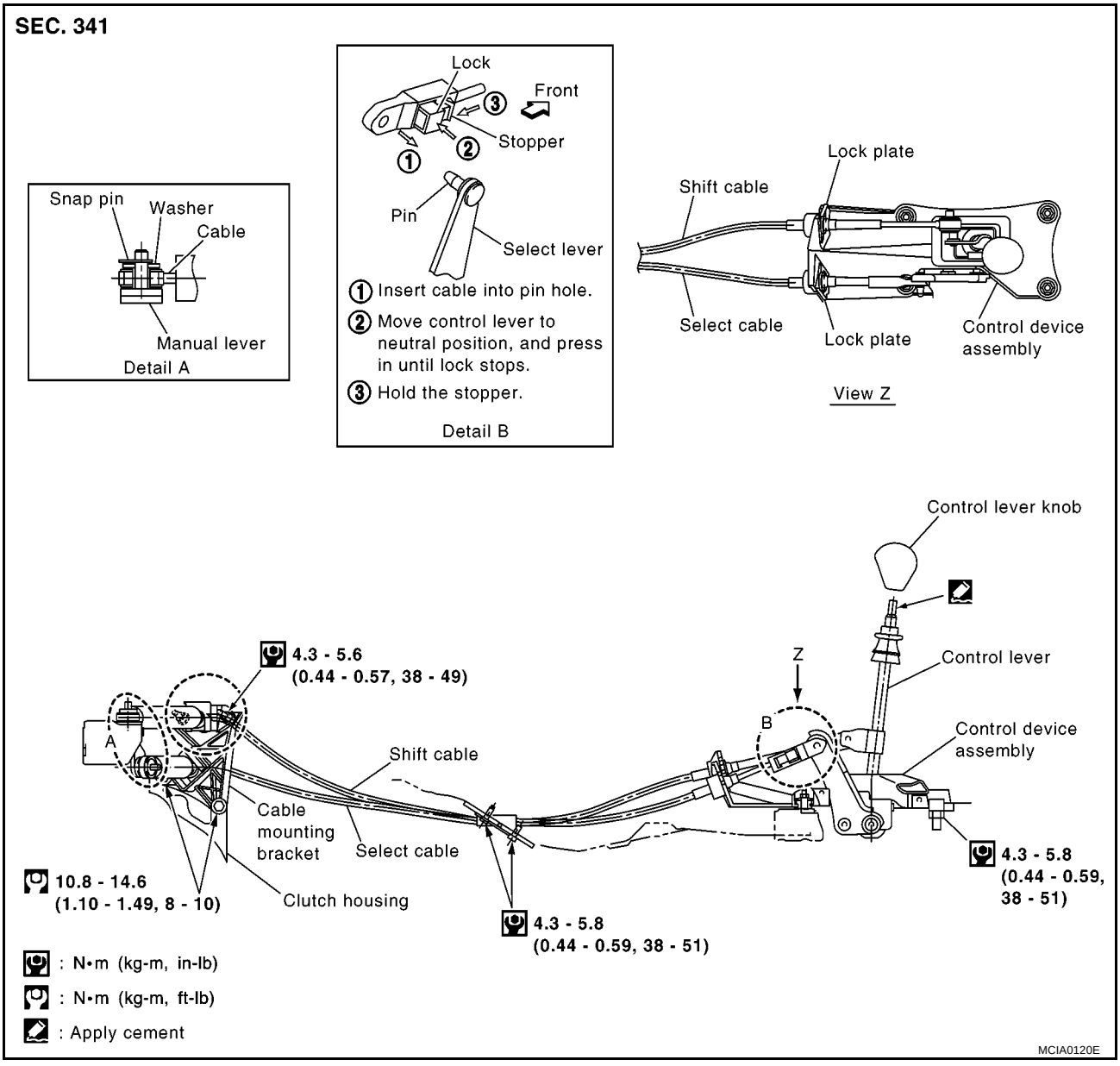

CAUTION:

- **Keep in mind that the select side lock plate for securing the control cable is different from the one on the shift side.**
- **After assembly, make sure selector lever automatically returns to Neutral when it is moved to 1st, 2nd, or Reverse.**

AIR BREATHER HOSE

PFP:31098

Removal and Installation

ECS0095S

Refer to the figure for air breather hose removal and installation information.

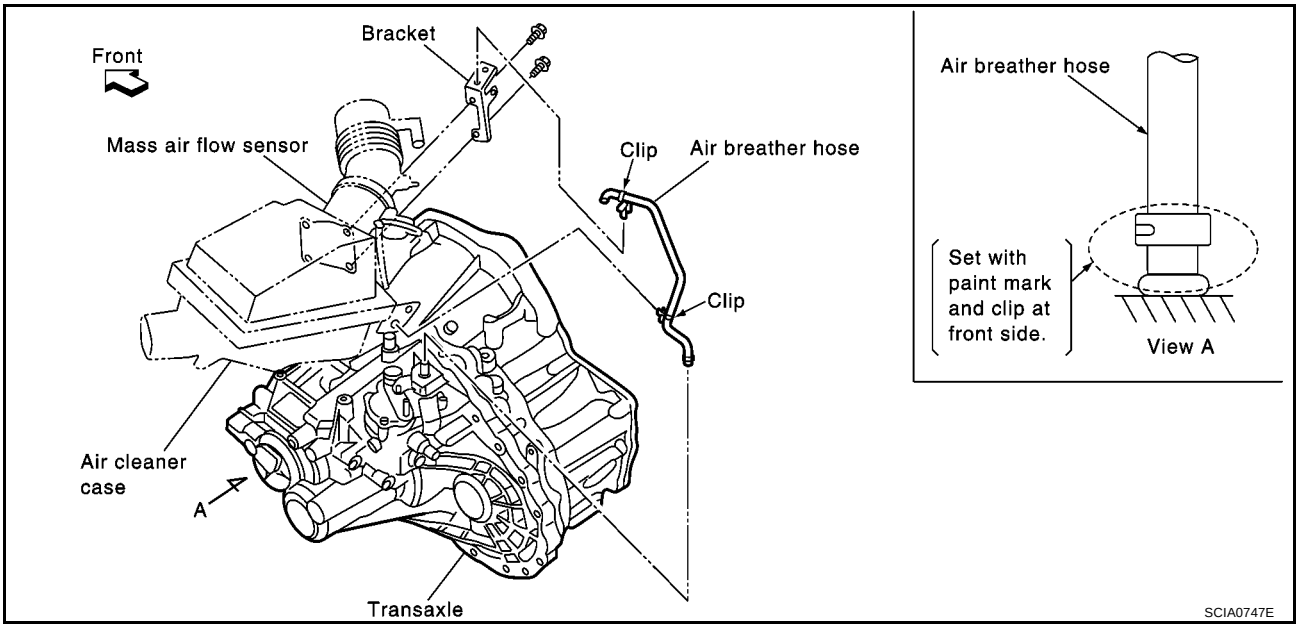

CAUTION:

- **Make sure there are no pinched or restricted areas on the air breather hose caused by bending or winding when installing it.**
- **Be sure to insert hose into the transaxle tube until overlap area reaches the spool.**

TRANSAXLE ASSEMBLY

PFP:32010

Removal and Installation

ECS0095T

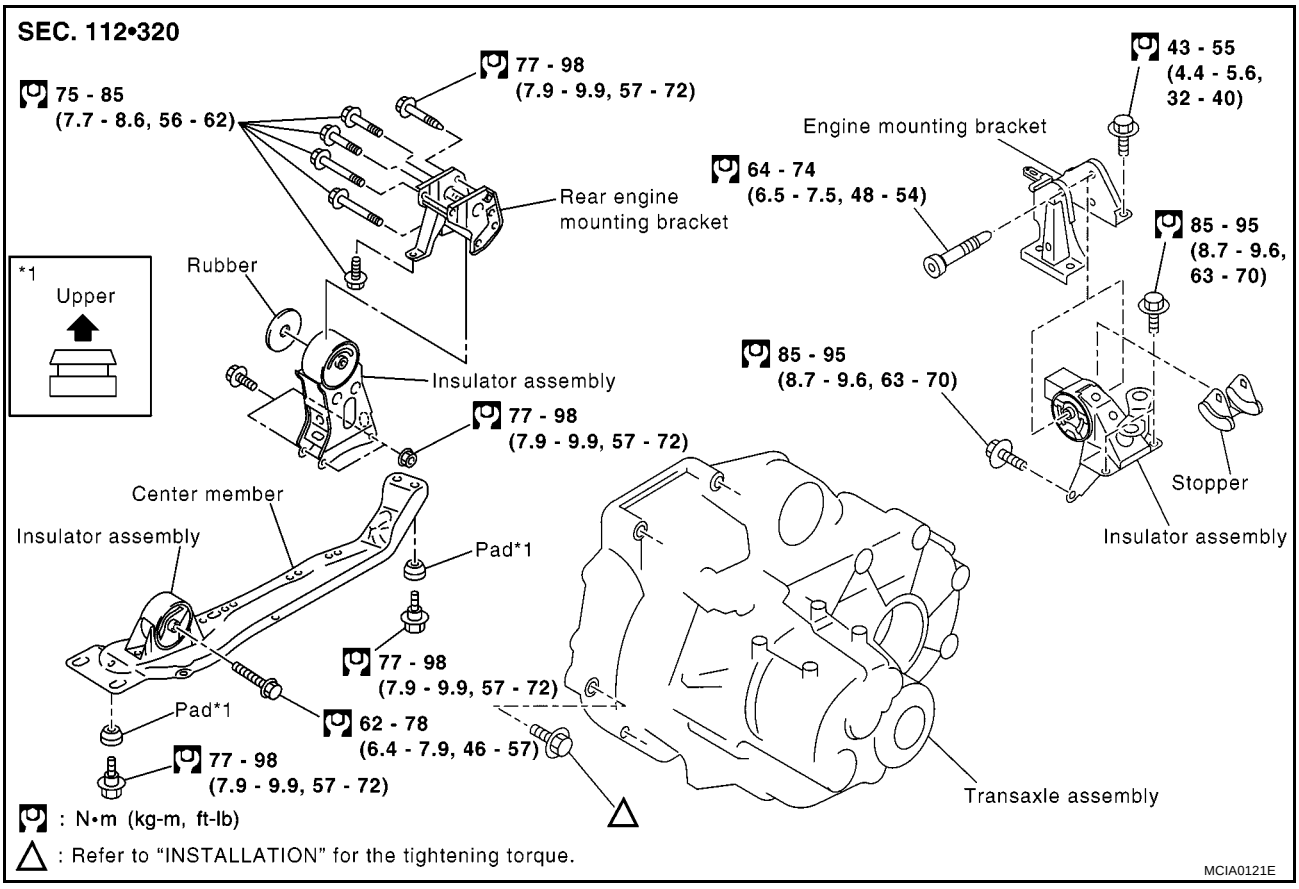

REMOVAL

1. Remove battery and its bracket.
2. Remove fuse box from battery bracket.
3. Remove air cleaner box with mass air flow sensor.
4. Remove air breather hose and vacuum pump hose.
5. Remove fuel filter bracket.
6. Remove clutch operating cylinder.

   CAUTION:
   Do not depress clutch pedal during removal procedure.
7. Disconnect control cable from transaxle.
8. Drain gear oil from transaxle.
9. Disconnect neutral switch and back-up lamp switch harness connectors.
10. Remove starter motor.
11. Remove crankshaft position sensor (POS) from transaxle.
12. Remove exhaust front tube and the drive shaft.
13. Place a jack onto the transaxle.

    CAUTION:
    When setting jack, be careful not to bring it into contact with the switch.
14. Remove center member, engine insulator and engine mount bracket.
15. Support engine by placing a jack under oil pan.
16. Remove bolts securing transaxle to engine.

17. Remove transaxle from vehicle.

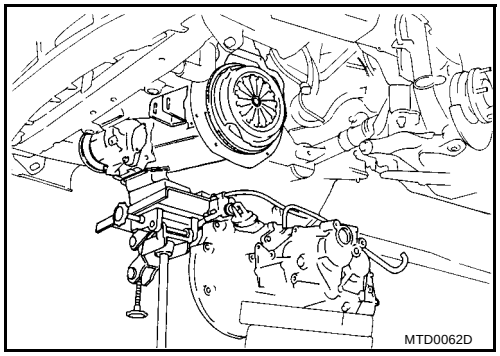

INSTALLATION

Paying attention to the following items, install in the reverse order of removal.

- When installing the transaxle to the engine, tighten to the specified torque.

  CAUTION:
  When installing transaxle, be careful not to bring transaxle input shaft into contact with the clutch cover.

Bolt No.	1	2	3	4	5	6
Quantity	2	2	1	1	3	1
"ℓ" mm (in)	55 (2.17)	70 (2.76)	120 (4.72)	45 (1.77)	40 (1.57)	35 (1.38)
Tightening torque N·m (kg-m, ft-lb)	39 - 49 (4.0 - 5.0, 29 - 36)				42 - 52 (4.2 - 5.3, 30 - 38)	

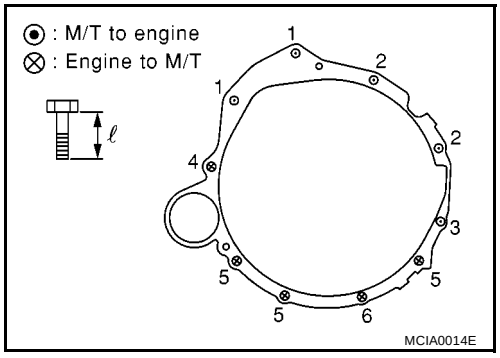

- After installation, check oil level, and look for leaks and loose mechanisms.

Component Parts

ECS0095U

CASE AND HOUSING COMPONENTS

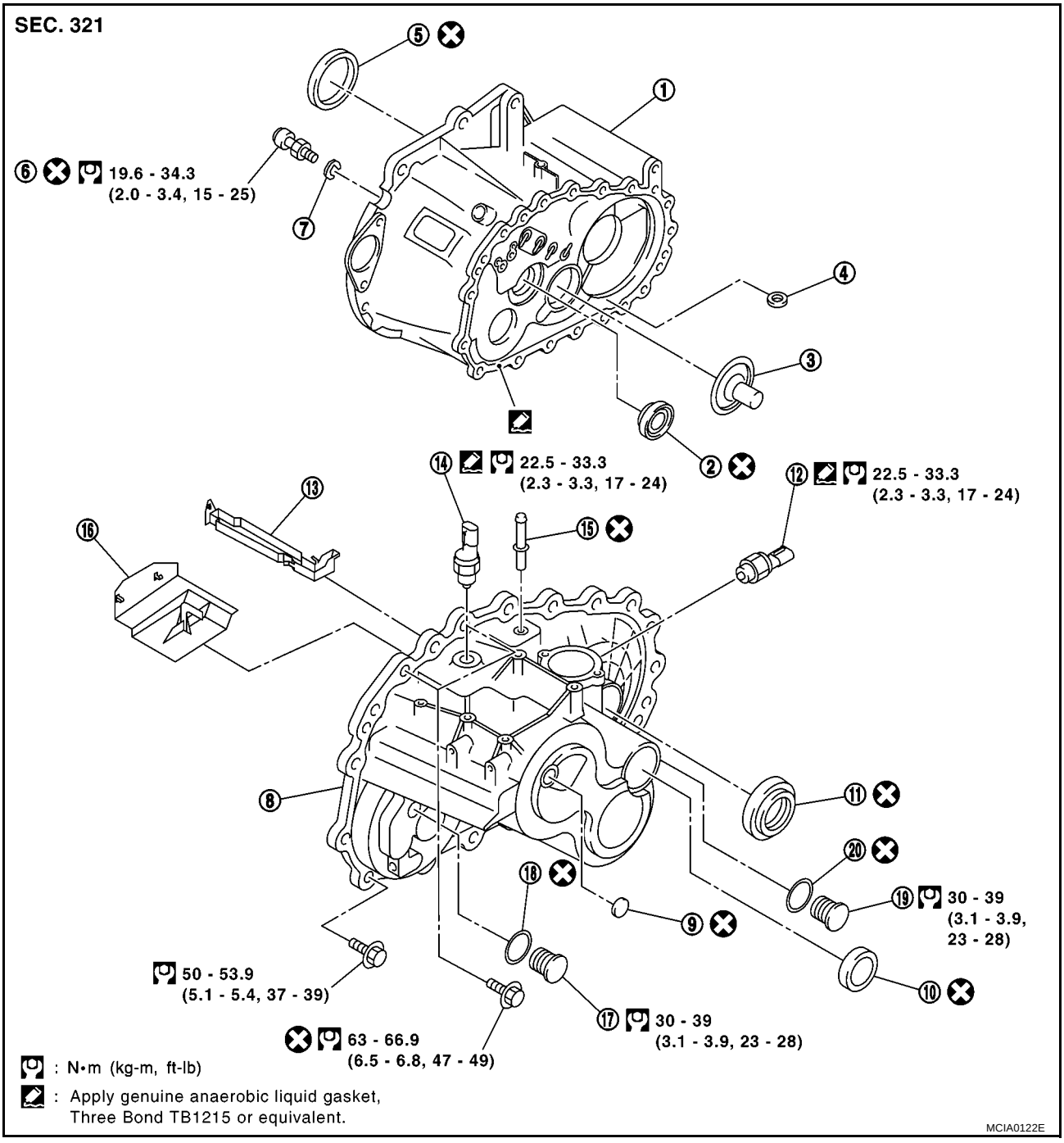

1.	Clutch housing	2.	Input shaft oil seal	3.	Oil channel
4.	Magnet	5.	Differential oil seal	6.	Ball pin
7.	Washer	8.	Transaxle case	9.	Welch plug
10.	Bore plug	11.	Differential oil seal	12.	Park/Neutral position switch
13.	Oil gutter	14.	Back-up lamp switch	15.	Air breather tube
16.	Baffle plate	17.	Filler plug	18.	Gasket
19.	Drain plug	20.	Gasket		

GEAR COMPONENTS

SEC. 322

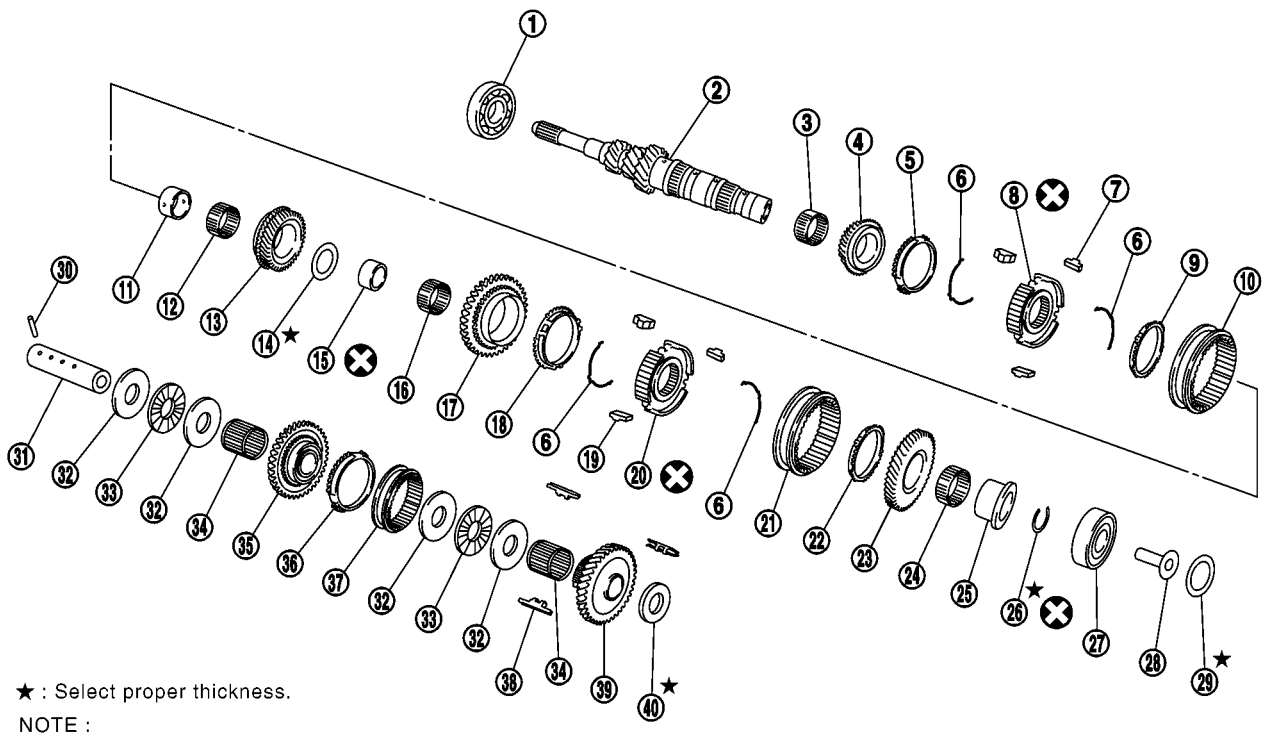

★ : Select proper thickness.

NOTE :

- Apply gear oil to gears, shafts, synchronizers and bearings when assembling.
- Replace ⑧ and ⑩, ⑳ and ㉑ as a set.

MCIA0143E

1. Input shaft front bearing	2. Input shaft	3. Needle bearing
4. 3rd input gear	5. 3rd baulk ring	6. Spread spring
7. 3rd & 4th shifting insert	8. 3rd & 4th synchronizer hub	9. 4th baulk ring
10. 3rd & 4th coupling sleeve	11. Bushing	12. Needle bearing
13. 4th input gear	14. Thrust washer	15. Bushing
16. Needle bearing	17. 5th input gear	18. 5th baulk ring
19. 5th & 6th shifting insert	20. 5th & 6th synchronizer hub	21. 5th & 6th coupling sleeve
22. 6th baulk ring	23. 6th input gear	24. Needle bearing
25. Bushing	26. Snap ring	27. Input shaft rear bearing
28. Oil channel	29. Input shaft rear bearing adjusting shim	30. Retaining pin
31. Reverse idler shaft	32. Thrust bearing washer	33. Thrust bearing
34. Needle bearing	35. Reverse idler gear (Front)	36. Reverse baulk ring
37. Reverse coupling sleeve	38. Insert spring	39. Reverse idler gear (Rear)
40. Reverse idler gear adjusting shim		

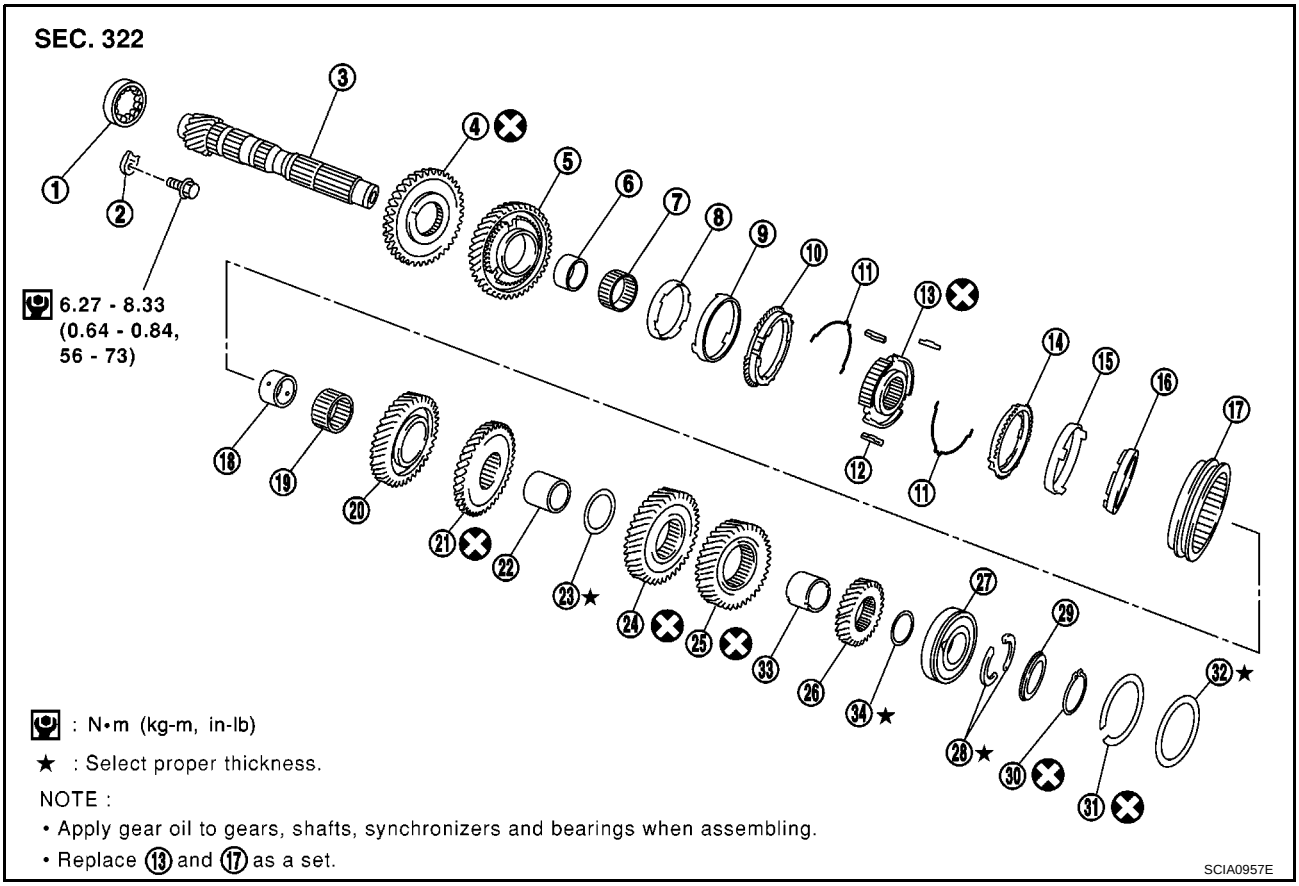

1.	Mainshaft front bearing	2.	Mainshaft bearing retainer	3.	Mainshaft
4.	Reverse main gear	5.	1st main gear	6.	Bushing
7.	Needle bearing	8.	1st inner baulk ring	9.	1st gear synchronizer cone
10.	1st outer baulk ring	11.	Spread spring	12.	1st & 2nd shifting insert
13.	1st & 2nd synchronizer hub	14.	2nd outer baulk ring	15.	2nd gear synchronizer cone
16.	2nd inner baulk ring	17.	1st & 2nd coupling sleeve	18.	Bushing
19.	Needle bearing	20.	2nd main gear	21.	3rd main gear
22.	3rd & 4th mainshaft spacer	23.	4th main adjusting shim	24.	4th main gear
25.	5th main gear	26.	6th main gear	27.	Mainshaft rear bearing
28.	Mainshaft C ring	29.	C ring holder	30.	Snap ring
31.	Snap ring	32.	Mainshaft rear bearing adjusting shim	33.	5th & 6th mainshaft spacer
34.	6th main adjusting shim				

SHIFT CONTROL COMPONENTS

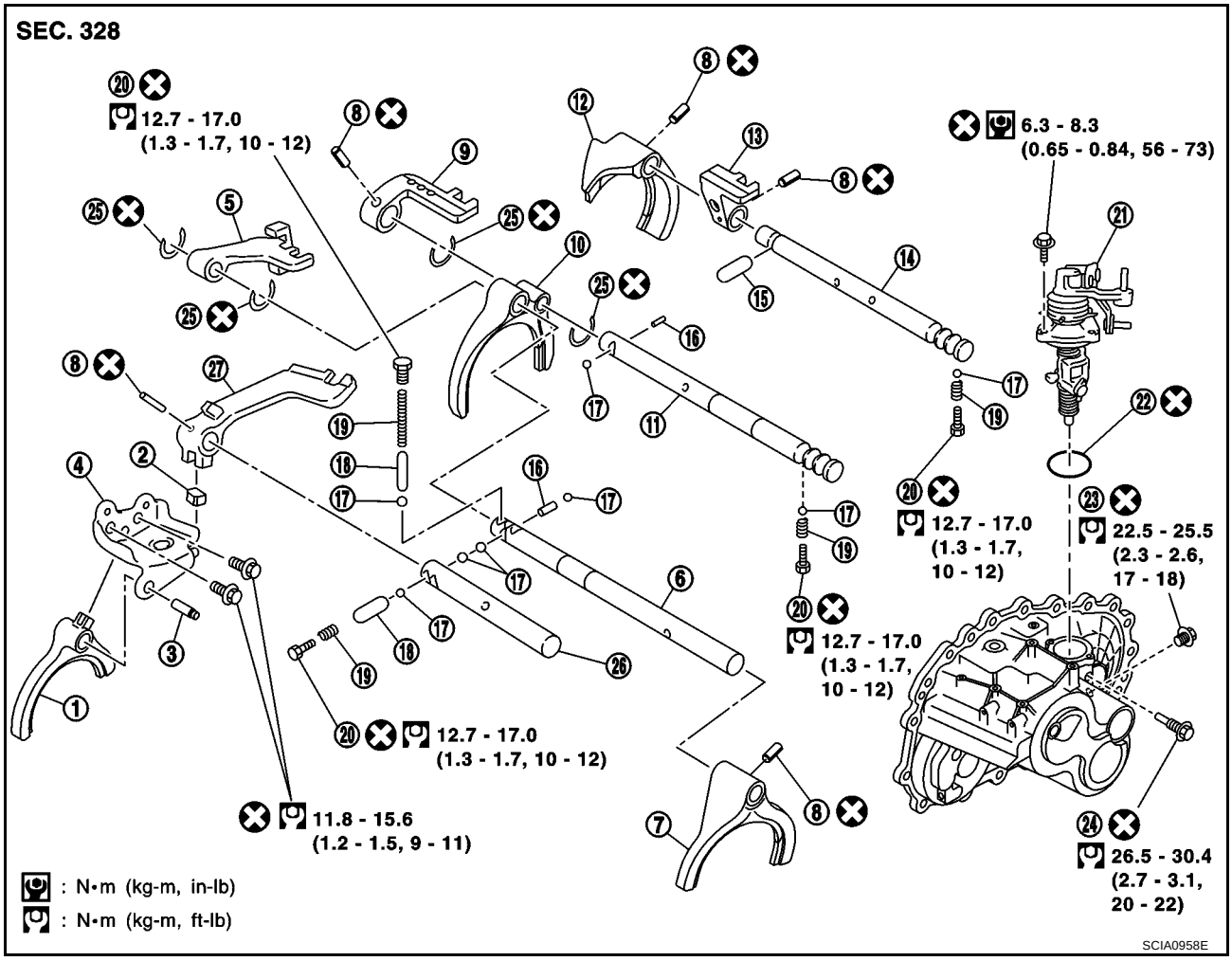

1.	Reverse shift fork	2.	Shifter cap	3.	Reverse fork rod
4.	Reverse lever assembly	5.	5th & 6th bracket	6.	5th & 6th fork rod
7.	5th & 6th shift fork	8.	Retaining pin	9.	3rd & 4th bracket
10.	3rd & 4th shift fork	11.	3rd & 4th fork rod	12.	1st & 2nd shift fork
13.	1st & 2nd bracket	14.	1st & 2nd fork rod	15.	Shift check sleeve
16.	Inter lock pin	17.	Check ball	18.	Shift check sleeve
19.	Check spring	20.	Check plug	21.	Control assembly
22.	O ring	23.	Shift check	24.	Stopper bolt
25.	Stopper ring	26.	Reverse bracket fork rod	27.	Reverse bracket

FINAL DRIVE COMPONENTS

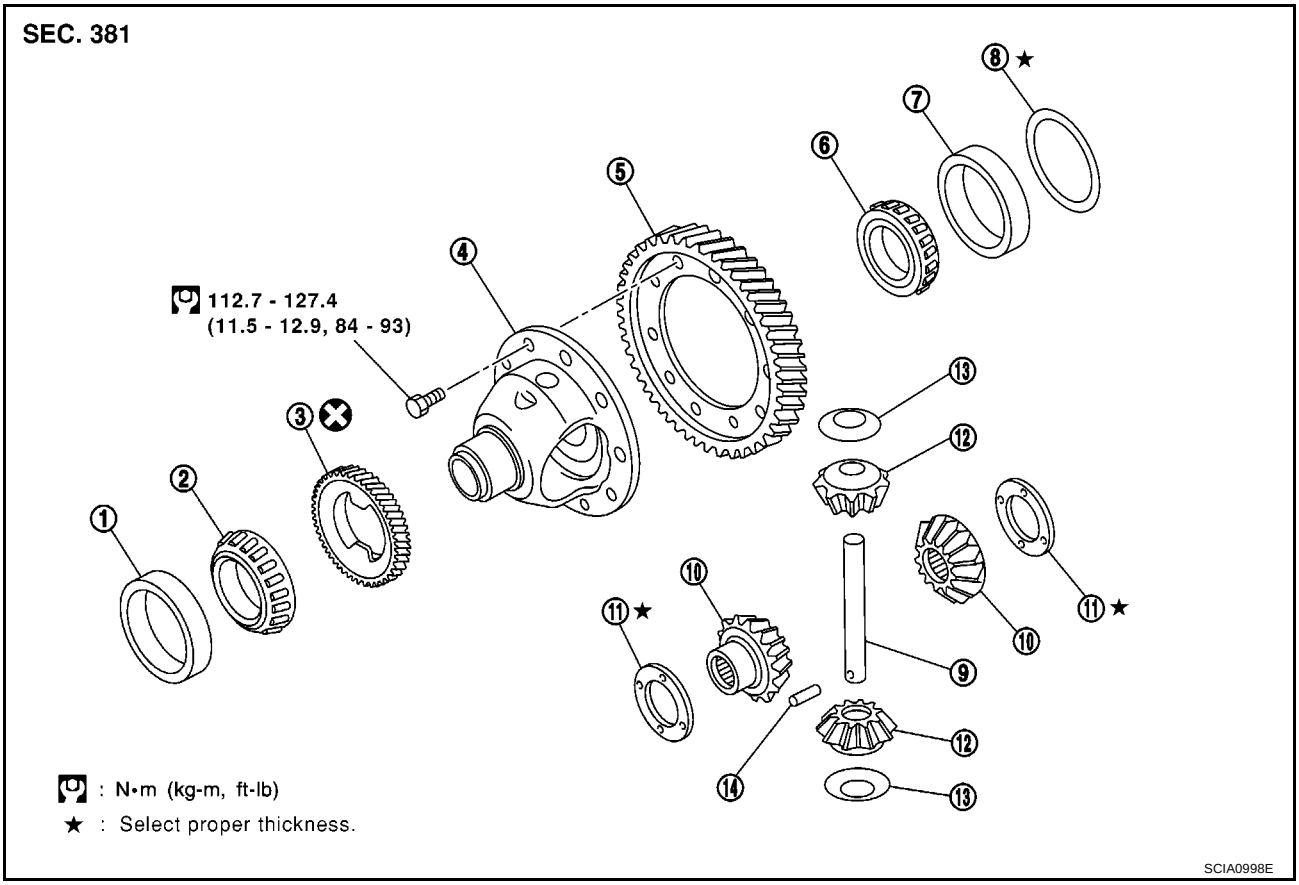

1. Differential side bearing outer race	2. Differential side bearing	3. Speedometer drive gear
4. Differential case	5. Final gear	6. Differential side bearing
7. Differential side bearing outer race	8. Differential side bearing adjusting shim	9. Pinion mate shaft
10. Side gear	11. Side gear thrust washer	12. Pinion mate gear
13. Pinion mate gear washer	14. Retaining pin	

Disassembly and Assembly

ECS0095V

DISASSEMBLY

1. Remove drain plug and filler plug.
2. Remove park/neutral position switch and back-up lamp switch.
3. After removing shift check and stopper bolt, remove control assembly.

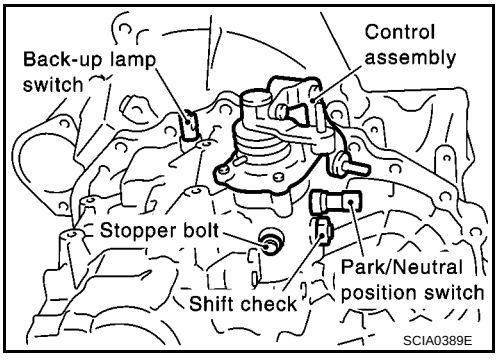

4. Remove check plugs (4 pieces), check springs (4 pieces), check balls (4 pieces) and shift check sleeve (2 pieces).

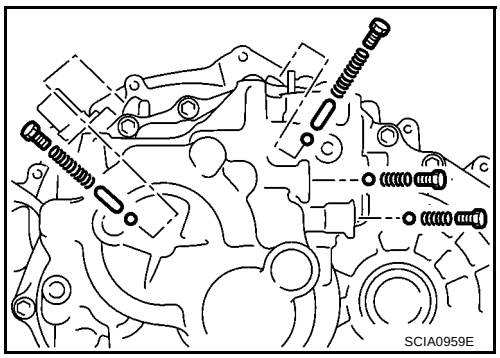

5. Remove transaxle case fixing bolts.
6. Remove bore plug.

   CAUTION:
   Be careful not to damage transaxle case.
7. While spreading the snap ring of mainshaft rear bearing located at bore plug hole, remove transaxle case.
8. Remove oil gutter, baffle plate.
9. Remove snap ring, mainshaft rear bearing adjusting shim and input shaft rear bearing adjusting shim from transaxle case.

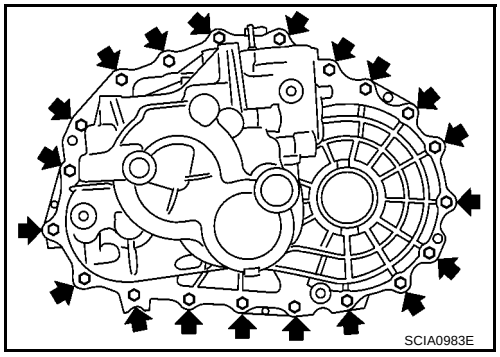

10. Remove differential side bearing outer race (transaxle case side) and then adjusting shim.

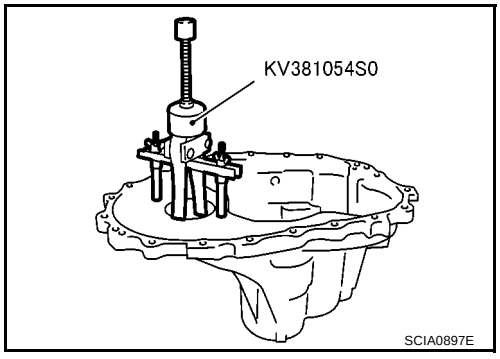

11. Remove welch plug.

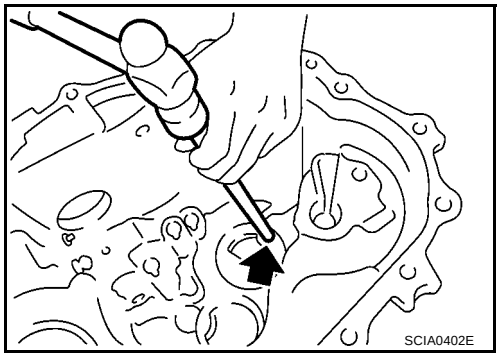

12. Remove differential oil seal (transaxle case side).
13. Remove magnet from clutch housing.

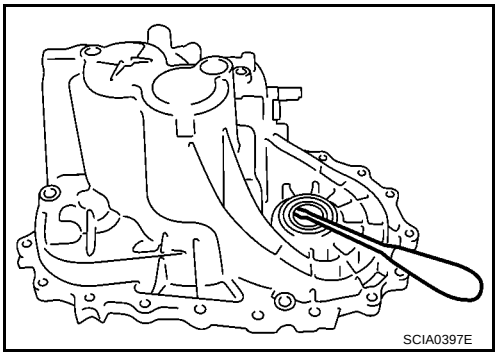

14. With shift lever in 5th position, remove bracket bolts from reverse lever assembly. Lift reverse lever assembly to remove.
    CAUTION:
    Be careful not to lose shifter cap.
15. Pull out reverse fork rod then remove reverse shift fork.

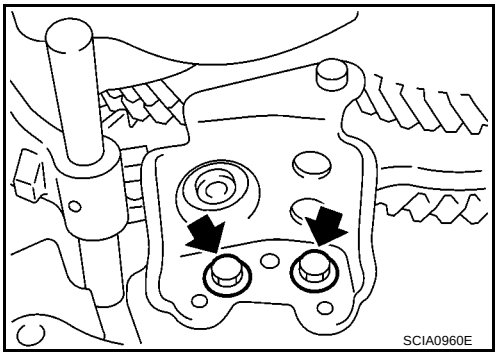

16. Remove retaining pin of reverse bracket using pin punch.
17. Pull out reverse bracket and reverse bracket fork rod.
18. Remove check ball (2 pieces) and inter lock pin.

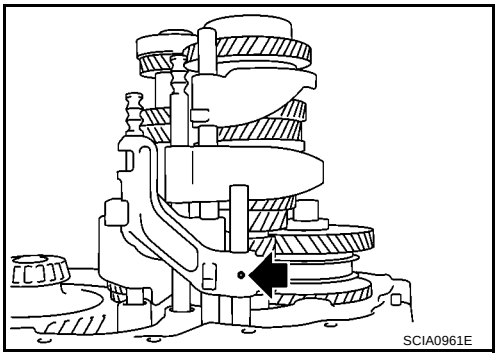

19. Shift 3rd & 4th fork rod to 3rd position. Remove retaining pin of 5th & 6th shift fork using pin punch.

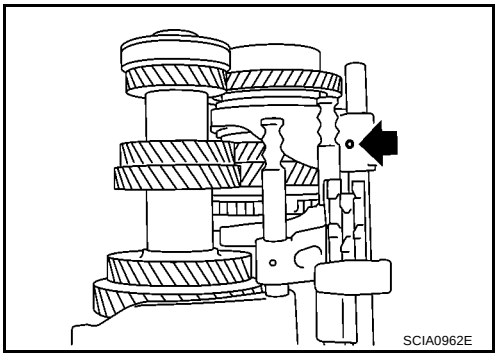

20. Remove stopper rings for 5th & 6th bracket.
21. Pull out 5th & 6th fork rod and remove 5th & 6th shift fork and 5th & 6th bracket.
22. Remove check balls (2 pieces) and inter lock pin.

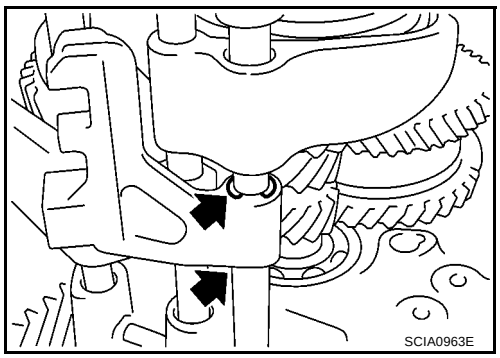

23. Remove retaining pin of 3rd & 4th bracket using pin punch.
24. Remove stopper rings for 3rd & 4th shift fork.
25. Pull out 3rd & 4th fork rod and remove 3rd & 4th shift fork and bracket.
26. Remove shift check sleeve from clutch housing.

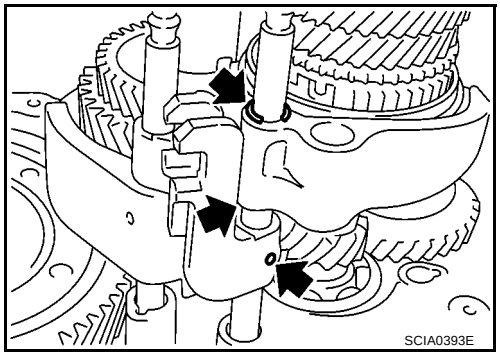

27. Remove retaining pin of 1st & 2nd shift fork using pin punch.
28. Pull out 1st & 2nd fork rod with bracket.
29. Remove 1st & 2nd shift fork.
30. Remove retaining pin of 1st & 2nd bracket using pin punch and separate fork rod and bracket.

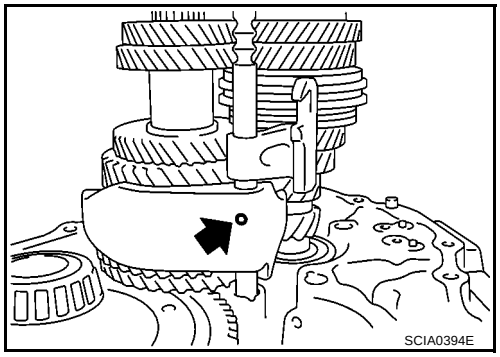

31. Remove gear components from clutch housing in the following procedure.

a. While tapping input shaft with plastic hammer, remove input shaft assembly, mainshaft assembly and reverse idler gear assembly as a set.

CAUTION:
Always withdraw mainshaft straight out. Failure to do so can damage resin oil channel on clutch housing side.

b. Remove final drive assembly.

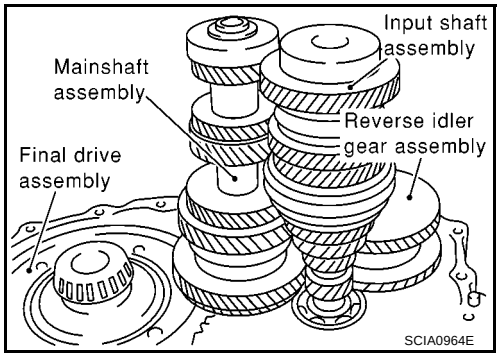

32. Remove mainshaft bearing retainer and then mainshaft front bearing.
33. Remove oil channel on mainshaft side.
34. Remove differential oil seal (clutch housing side).

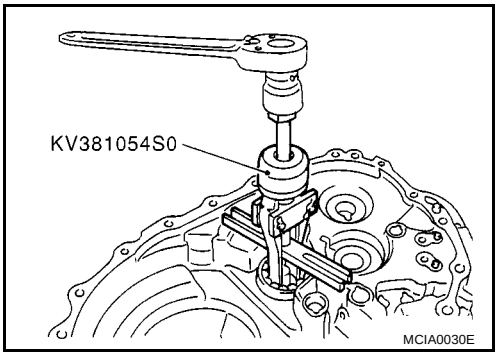

35. Remove differential side bearing outer race (clutch housing side).

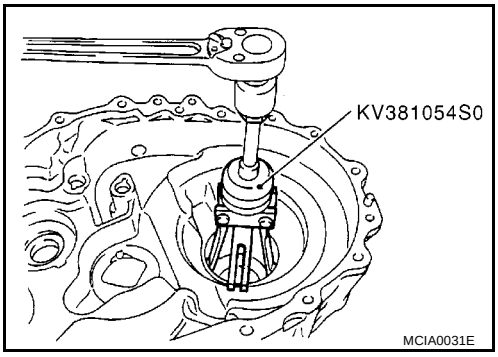

36. Remove input shaft oil seal.

CAUTION:
Be careful not to damage clutch housing.

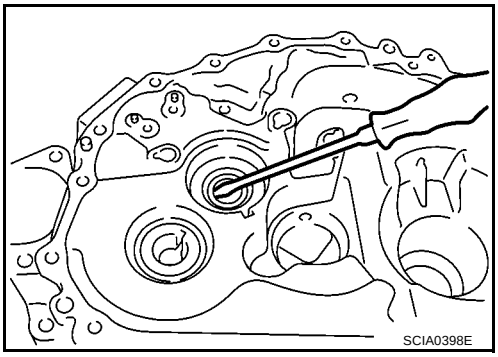

ASSEMBLY

1. Using a drift, install input shaft oil seal from clutch housing end of side to the depth of 1.8 to 2.8 mm (0.071 to 0.110 in).

CAUTION:
Do not reuse oil seal.

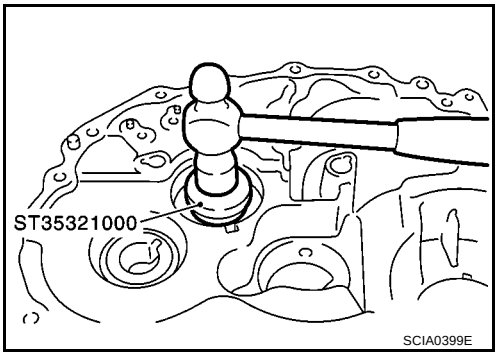

2. Using a drift, install differential oil seal until the face is flush with clutch housing.

   CAUTION:
   Do not reuse oil seal.

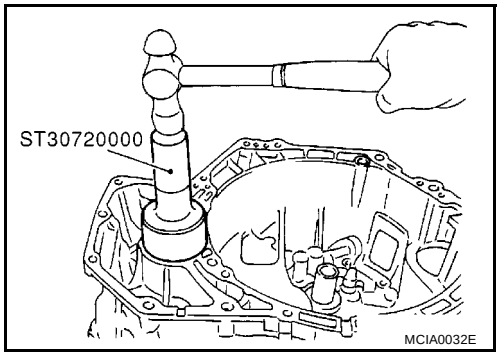

3. Install oil channel on mainshaft side.

   CAUTION:
   Be careful with orientation of installation.

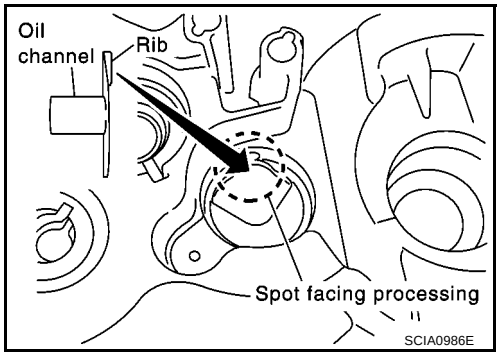

4. Using a drift, install mainshaft front bearing.

   CAUTION:
   Be careful with orientation of installation.

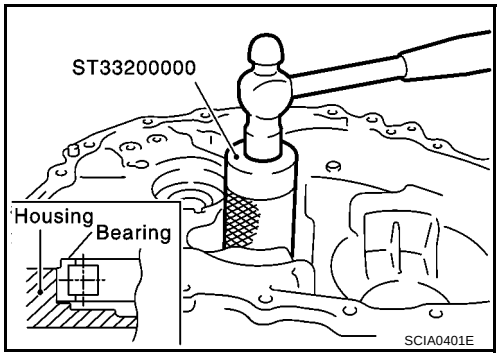

5. Install bearing retainer.

   CAUTION:
   Install with punched surface facing up.

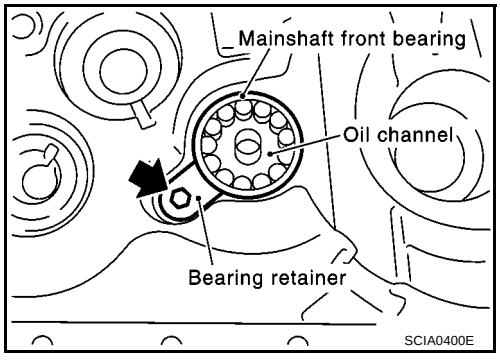

6. Install differential side bearing outer race.

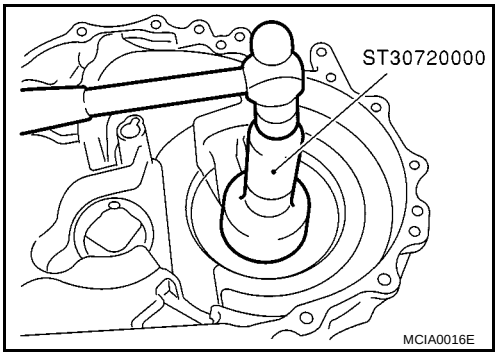

7. Install final drive assembly into clutch housing.

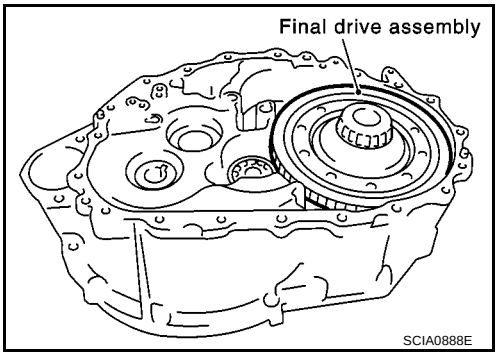

8. Install input shaft assembly, mainshaft assembly, and reverse idler gear assembly into clutch housing.

CAUTION:
Be sure not to damage input shaft oil seal.

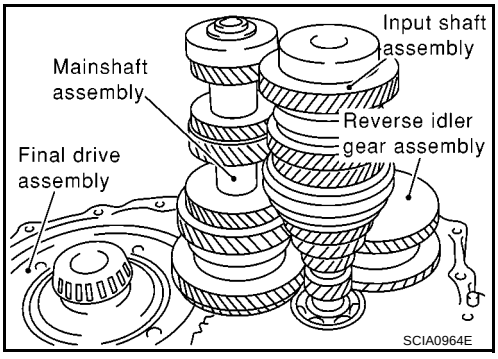

9. Install 1st-2nd fork rod bracket onto 1st-2nd fork rod, and then install retaining pin.

CAUTION:
Do not reuse retaining pin.

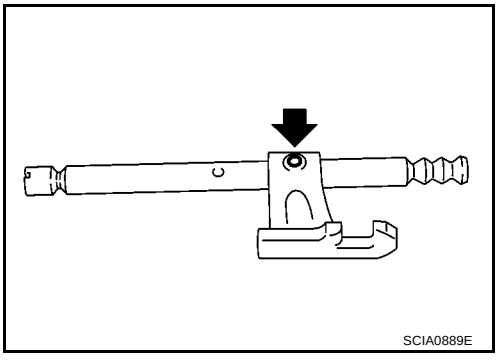

10. Install 1st-2nd fork rod and 1st-2nd shift fork, and then install retaining pin.

    CAUTION:
    Do not reuse retaining pin.
11. Install shift check sleeve.

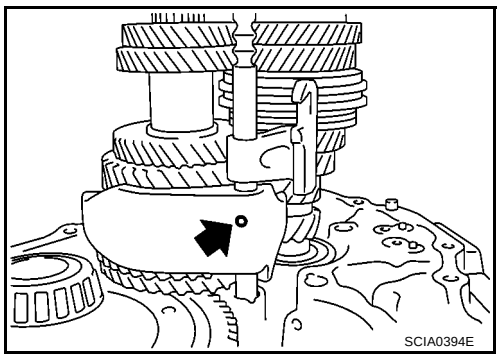

12. Install 3rd-4th bracket, 3rd-4th shift fork, and 3rd-4th fork rod with inter lock pin.
13. Install stopper ring onto 3rd-4th shift fork.

    CAUTION:
    Do not reuse stopper ring.
14. Install retaining pin onto 3rd-4th bracket.

    CAUTION:
    Do not reuse retaining pin.
15. Install 2 check balls.

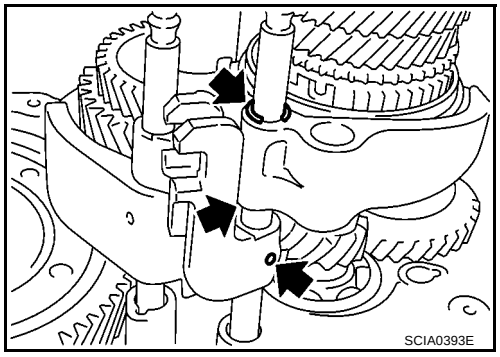

16. Install 5th-6th bracket, 5th-6th shift fork, and 5th-6th fork rod with interlock pin.
17. Install stopper ring onto 5th-6th bracket.

    CAUTION:
    Do not reuse stopper ring.

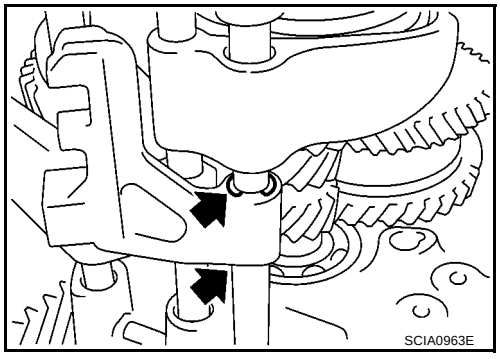

18. Install retaining pin onto 5th-6th shift fork.

    CAUTION:
    Do not reuse retaining pin.
19. Install 2 check balls.
20. Install reverse bracket fork rod and reverse lever bracket.

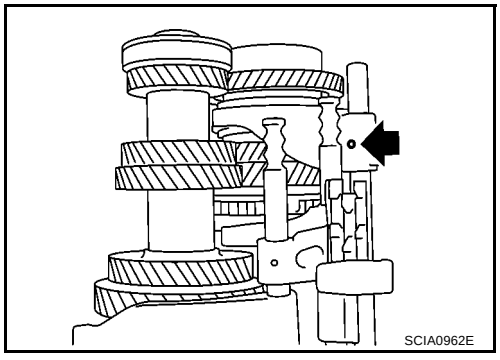

21. Install retaining pin onto reverse bracket.

CAUTION:
Do not reuse retaining pin.

22. Install reverse shift fork and reverse fork rod.
23. Install reverse lever assembly following procedures below.

a. Install shifter cap onto reverse lever assembly cam, and then install them onto reverse shift fork.

CAUTION:
Do not drop shifter cap.

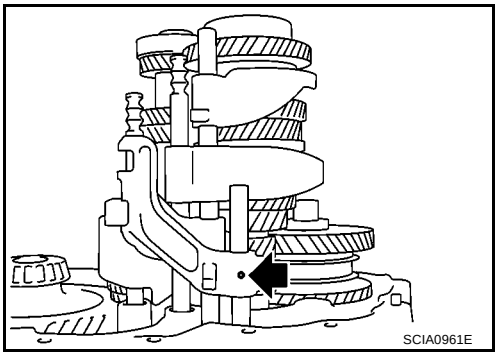

b. While lifting reverse shift fork, align cam with reverse bracket.

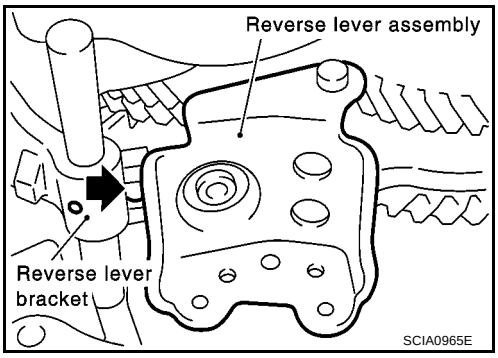

c. Tighten mounting bolts to specified torque, and then install reverse lever assembly.
24. Install the magnet onto clutch housing.

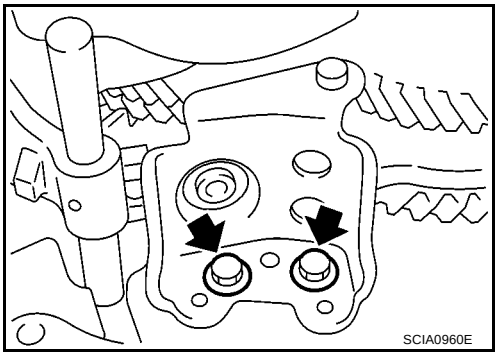

25. Using a drift, install differential oil seal until it is flush with end face of transaxle case.

CAUTION:
Do not reuse oil seal.

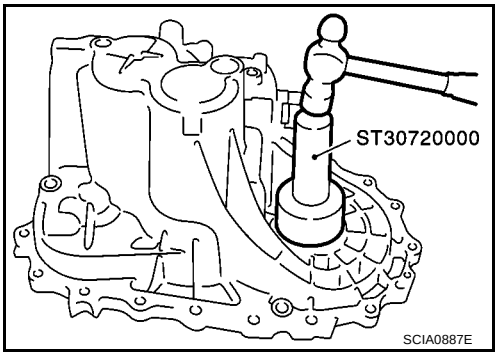

26. Install selected input shaft adjusting shim onto input shaft.
    - For selection of adjusting shims: Refer to MT-32, "INPUTSHAFT END PLAY" .
27. Install baffle plate and oil gutter.
28. Install transaxle case following procedures below.

a. Install selected mainshaft rear bearing adjusting shim into transaxle case.
    - For selection of adjusting shims: Refer to MT-34, "MAINSHAFT END PLAY" .

b. Temporarily install snap ring of mainshaft rear bearing into transaxle case.

CAUTION:
Do not reuse the snap ring.

c. Apply recommended sealant to mating surfaces of transaxle case and clutch housing.

CAUTION:

- **Remove old sealant adhering to mounting surfaces. Also remove any moisture, oil, or foreign material adhering to application and mounting surfaces.**
- **Make sure no flaw or damage is on the mounting surfaces.**

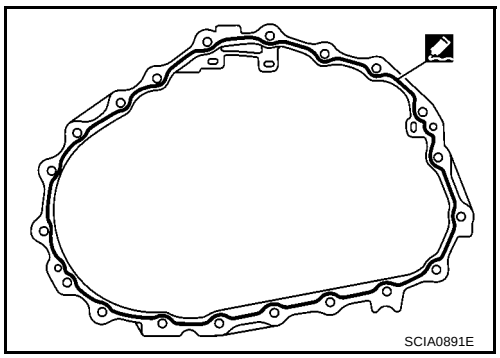

d. With snap ring of mainshaft rear bearing temporarily installed, place transaxle case over clutch housing.

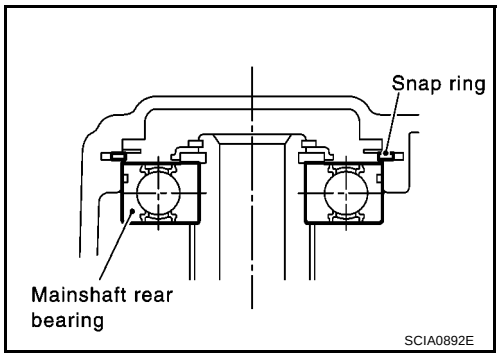

e. Through bore plug mounting hole, with snap ring stretched, and lift up mainshaft assembly from the control assembly mounting hole.

f. Securely install snap ring onto mainshaft rear bearing.

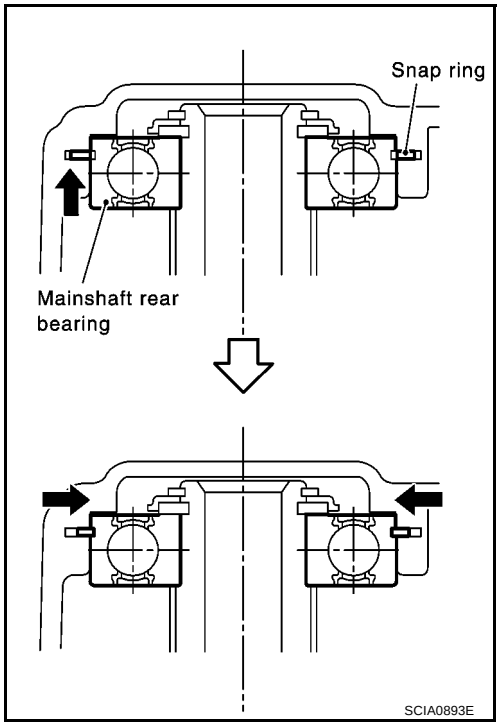

g. Tighten mounting bolts.

Bolt A:

: 50.0 - 53.9 N·m (5.1 - 5.4 kg-m, 37 - 39 ft-lb)

Bolt B:

: 63.0 - 66.9 N·m (6.5 - 6.8 kg-m, 47 - 49 ft-lb)

CAUTION:

Always replace bolts B as they are self-sealing bolts.

h. Install control assembly.

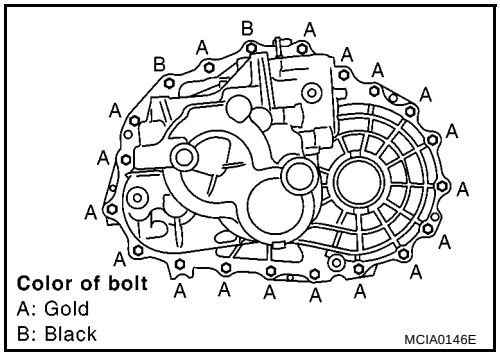

CAUTION:
Do not reuse the O-ring.

i. Install shift check and stopper bolt.

CAUTION:
Do not reuse shift check and stopper bolt.

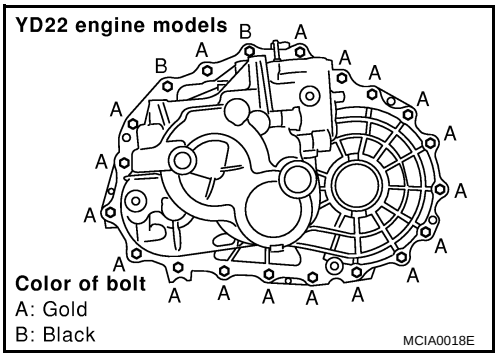

29. Using a drift, install bore plug.

CAUTION:
Do not reuse bore plug.

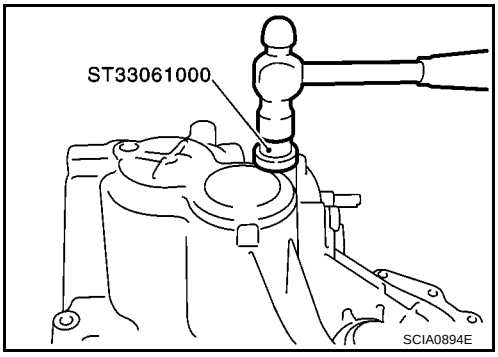

30. Using a drift, install welch plug.

CAUTION:
Do not reuse welch plug.

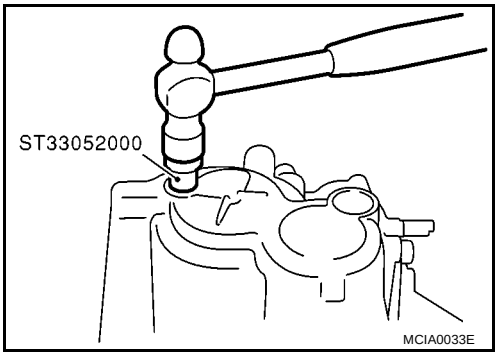

31. Install 2 shift check sleeves, 4 check balls, 4 check springs, and 4 check ball plugs.

CAUTION:
Do not reuse check ball plug.

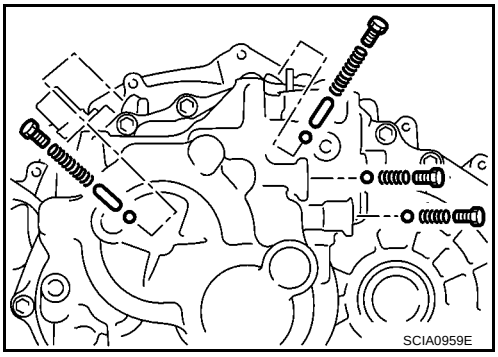

32. Apply recommended sealant to threads of neutral switch and reverse lamp switch. Then install them into transaxle case.
33. Install gaskets onto drain plug and filler plug, and then install them into transaxle case.

CAUTION:
- **Do not reuse gasket.**
- **After oil is filled, tighten plug to specified torque.**

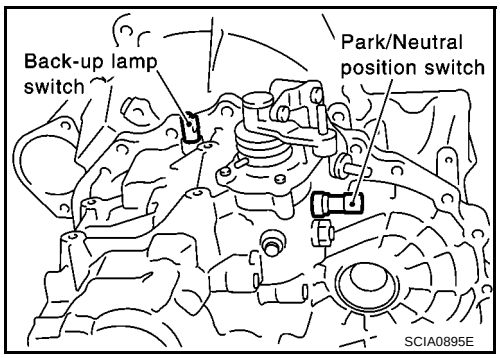

Adjustment

ECS0095W

INPUTSHAFT END PLAY

- When adjusting input shaft end play, select adjusting shim for input shaft bearing. To select adjusting shim, measure clearance between transaxle case and input shaft rear bearing.
- Calculate dimension “O” (thickness of adjusting shim) using the following procedure to satisfy specification of end play for input shaft rear bearing.

End play : 0 - 0.06 mm (0 - 0.0024 in)

Dimension “O” = (O_1 – O_2) + End play

O : Thickness of adjusting shim

O_1 : Distance between transaxle case end face and mounting face of adjusting shim

O_2 : Distance between clutch housing case end face and end face of input shaft rear bearing

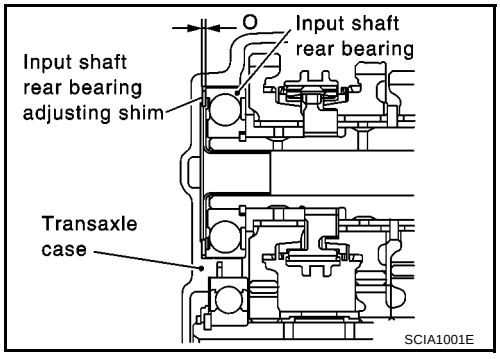

Adjusting Shim

Shim thickness	Part number	Shim thickness	Part number	Shim thickness	Part number
0.40 mm (0.0157 in)	32225 8H500	0.88 mm (0.0346 in)	32225 8H512	1.36 mm (0.0535 in)	32225 8H524
0.44 mm (0.0173 in)	32225 8H501	0.92 mm (0.0362 in)	32225 8H513	1.40 mm (0.0551 in)	32225 8H560
0.48 mm (0.0189 in)	32225 8H502	0.96 mm (0.0378 in)	32225 8H514	1.44 mm (0.0567 in)	32225 8H561
0.52 mm (0.0205 in)	32225 8H503	1.00 mm (0.0394 in)	32225 8H515	1.48 mm (0.0583 in)	32225 8H562
0.56 mm (0.0220 in)	32225 8H504	1.04 mm (0.0409 in)	32225 8H516	1.52 mm (0.0598 in)	32225 8H563
0.60 mm (0.0236 in)	32225 8H505	1.08 mm (0.0425 in)	32225 8H517	1.56 mm (0.0614 in)	32225 8H564
0.64 mm (0.0252 in)	32225 8H506	1.12 mm (0.0441 in)	32225 8H518	1.60 mm (0.0630 in)	32225 8H565
0.68 mm (0.0268 in)	32225 8H507	1.16 mm (0.0457 in)	32225 8H519	1.64 mm (0.0646 in)	32225 8H566
0.72 mm (0.0283 in)	32225 8H508	1.20 mm (0.0472 in)	32225 8H520	1.68 mm (0.0661 in)	32225 8H567
0.76 mm (0.0299 in)	32225 8H509	1.24 mm (0.0488 in)	32225 8H521	1.72 mm (0.0677 in)	32225 8H568
0.80 mm (0.0315 in)	32225 8H510	1.28 mm (0.0504 in)	32225 8H522		
0.84 mm (0.0331 in)	32225 8H511	1.32 mm (0.0520 in)	32225 8H523		

CAUTION:
Only 1 adjusting shim can be selected.

1. Using depth micrometer and straight edge, measure dimension “O_1 ” between transaxle case end face and mounting face of adjusting shim.

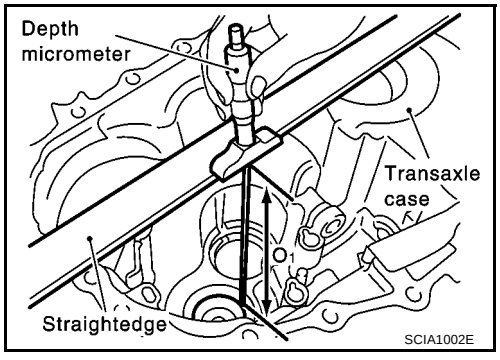

2. Using depth micrometer and straight edge as shown in the figure, measure dimension “O_2 ” between clutch housing case end face and end face of input shaft rear bearing.
3. Install selected input shaft rear bearing adjusting shim onto input shaft.

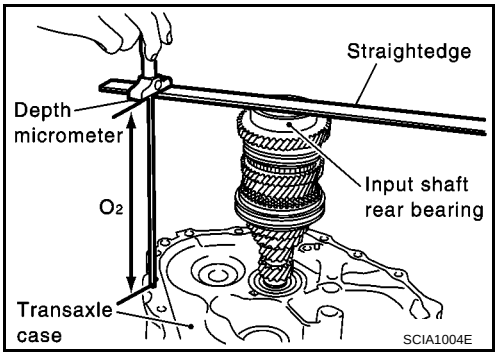

DIFFERENTIAL SIDE BEARING PRELOAD

- When adjusting differential side bearing preload, select adjusting shim for differential side bearing. To select adjusting shim, measure clearance “L” between transaxle case and differential side bearing outer race.
- Calculate dimension “L” (thickness of adjusting shim) using the following procedure to satisfy specification of preload for differential side bearing.

Preload : 0.15 - 0.21 mm (0.0059 - 0.0083 in)

Dimension “L” = (L_1 – L_2) + Preload

L : Thickness of adjusting shim

L_1 : Distance between clutch housing case end face and mounting face of adjusting shim

L_2 : Distance between differential side bearing and transaxle case

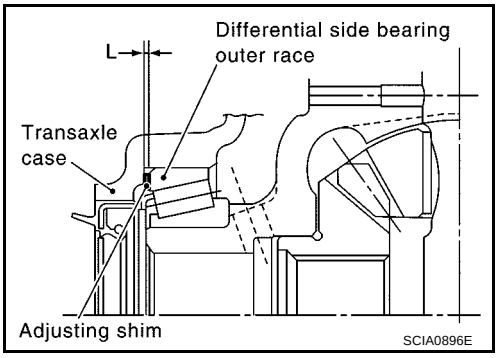

Adjusting Shim

Shim thickness	Part number
0.48 mm (0.0189 in)	31438 80X00
0.52 mm (0.0205 in)	31438 80X01
0.56 mm (0.0220 in)	31438 80X02
0.60 mm (0.0236 in)	31438 80X03
0.64 mm (0.0252 in)	31438 80X04
0.68 mm (0.0268 in)	31438 80X05
0.72 mm (0.0283 in)	31438 80X06
0.76 mm (0.0299 in)	31438 80X07
0.80 mm (0.0315 in)	31438 80X08
0.84 mm (0.0331 in)	31438 80X09
0.88 mm (0.0346 in)	31438 80X10
0.92 mm (0.0362 in)	31438 80X11

CAUTION:
Up to 2 adjusting shims can be selected.

1. Using depth micrometer and straightedge, measure dimension “L_1 ” between clutch housing case end face and mounting face of adjusting shim.
2. Install outer race onto differential side bearing on final gear side. Holding lightly the outer race horizontally by hand, rotate final gear five times or more (for smooth movement of bearing roller).

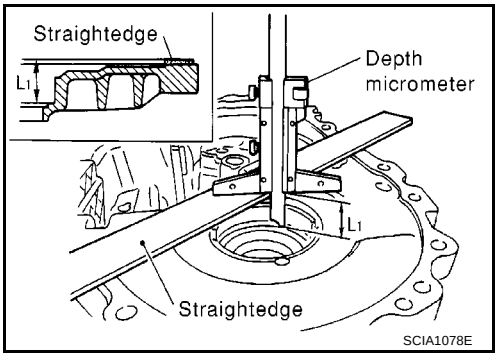

3. Using depth micrometer and straightedge as shown in the figure, measure dimension “L_2 ” between differential side bearing outer race and transaxle case end face.

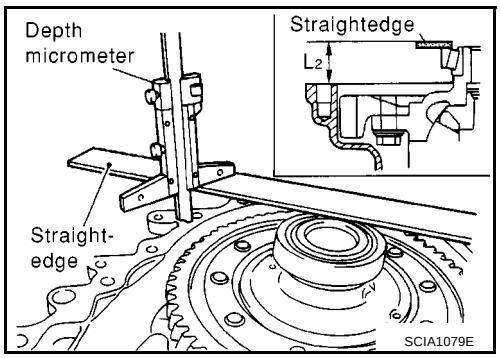

4. Install selected adjusting shim and then differential side bearing outer race.

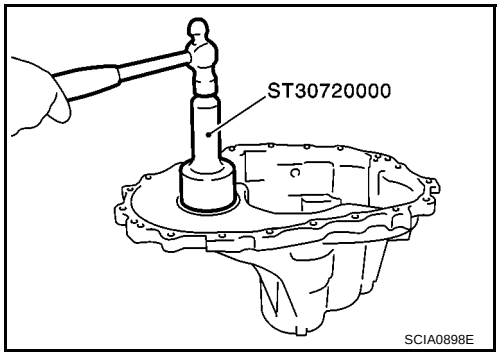

MAINSHAFT END PLAY

- When adjusting mainshaft end play, select adjusting shim for mainshaft rear bearing. To select adjusting shim, measure clearance “M” between transaxle case and mainshaft rear bearing.
- Calculate dimension “P” (thickness of adjusting shim) using the following procedure to satisfy specification of end play for mainshaft rear bearing.

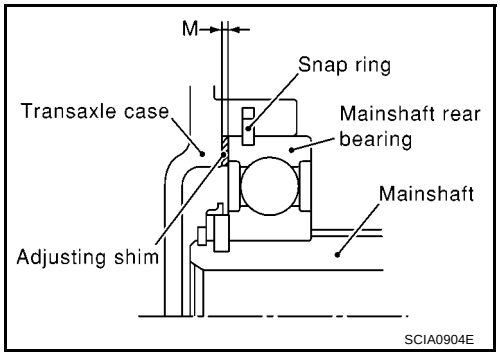

End play : 0 - 0.06 mm (0 - 0.0024 in)

Dimension “P” = “M” + End play

P : Thickness of adjusting shim

M : Distance between mainshaft rear bearing and transaxle case

Adjusting Shim

Shim thickness	Part number
0.44 mm (0.0173 in)	32238 8H510
0.48 mm (0.0189 in)	32238 8H511
0.52 mm (0.0205 in)	32238 8H512
0.56 mm (0.0220 in)	32238 8H513
0.60 mm (0.0236 in)	32238 8H514
0.64 mm (0.0252 in)	32238 8H515
0.68 mm (0.0268 in)	32238 8H516
0.72 mm (0.0283 in)	32238 8H517
0.76 mm (0.0299 in)	32238 8H518
0.80 mm (0.0315 in)	32238 8H519
0.84 mm (0.0331 in)	32238 8H520
0.88 mm (0.0346 in)	32238 8H521
0.92 mm (0.0362 in)	32238 8H522
0.96 mm (0.0378 in)	32238 8H523
1.00 mm (0.0394 in)	32238 8H524
1.04 mm (0.0409 in)	32238 8H560
1.08 mm (0.0425 in)	32238 8H561

CAUTION:
Only 1 adjusting shim can be selected.

1. Install mainshaft assembly to clutch housing.

2. Install snap ring to transaxle case.
3. Install transaxle case to clutch housing, and temporarily assemble them with fixing bolts. Install temporarily snap ring to mainshaft rear bearing.
4. Install dial gauge to snap ring access hole, and expand snap ring. Lift mainshaft assembly through control assembly installation hole, and push it against transaxle case. This state shall be defined as base. Moving distance of mainshaft assembly, with snap ring fit on main bearing, becomes “M”.

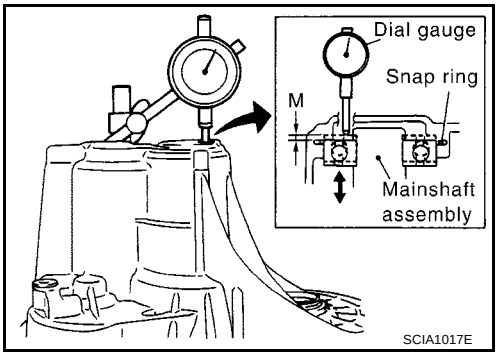

REVERSE IDLER GEAR END PLAY

- When adjusting reverse idler gear end play, select adjusting shim for reverse idler gear. To select adjusting shim, measure clearance between transaxle case and reverse idler gear.
- Calculate dimension “Q” (thickness of adjusting shim) using the following procedure to satisfy specification of end play for reverse idler gear.

End play : 0.04 - 0.14 mm (0.0016 - 0.0055 in)

Dimension “Q” = (Q_1 – Q_2) + End play

Q : Thickness of adjusting shim

Q_1 : Distance between transaxle case end face and mounting face of adjusting shim

Q_2 : Distance between clutch housing case end face and end face of reverse idler gear

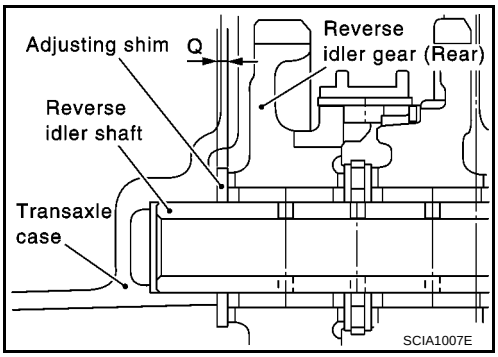

Adjusting Shim

Shim thickness	Part number	Shim thickness	Part number
1.76 mm (0.0693 in)	32237 8H800	2.24 mm (0.0882 in)	32237 8H812
1.84 mm (0.0724 in)	32237 8H802	2.32 mm (0.0913 in)	32237 8H814
1.92 mm (0.0756 in)	32237 8H804	2.40 mm (0.0945 in)	32237 8H816
2.00 mm (0.0787 in)	32237 8H806	2.48 mm (0.0976 in)	32237 8H818
2.08 mm (0.0819 in)	32237 8H808	2.56 mm (0.1008 in)	32237 8H820
2.16 mm (0.0850 in)	32237 8H810	2.64 mm (0.1039 in)	32237 8H822

CAUTION:

Only 1 adjusting shim can be selected.

1. Using depth micrometer and straight edge, measure dimension “Q_1 ” between transaxle case end face and mounting face of adjusting shim.

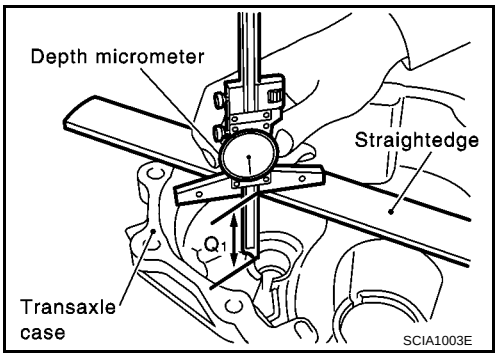

2. Using depth micrometer and straight edge as shown in the figure, measure dimension “Q_2 ” between clutch housing case end face and end face of reverse idler gear.
3. Install selected reverse idler gear adjusting shim onto reverse idler gear assembly.

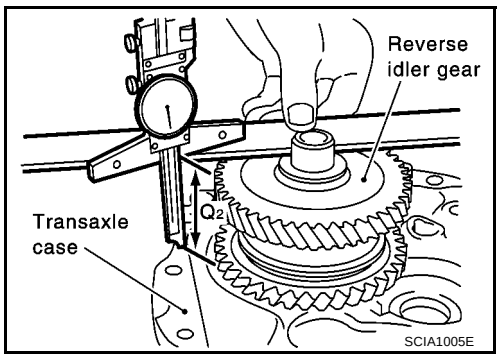

INPUT SHAFT AND GEARS

PFP:32200

Assembly and Disassembly

ECS0095X

DISASSEMBLY

1. Before disassembling, measure end play for 3rd, 4th, 5th and 6th input gears.

End play standard value

3rd gear : 0.18 - 0.31 mm (0.0071 - 0.0122 in)
4th gear : 0.20 - 0.30 mm (0.0079 - 0.0118 in)
5th gear : 0.06 - 0.16 mm (0.0024 - 0.0063 in)
6th gear : 0.06 - 0.16 mm (0.0024 - 0.0063 in)

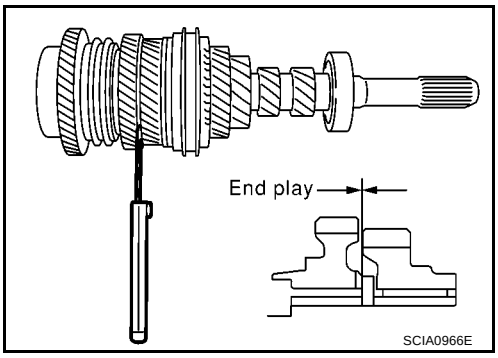

2. Remove oil channel.
3. Remove input shaft rear bearing.
4. Remove the snap ring.

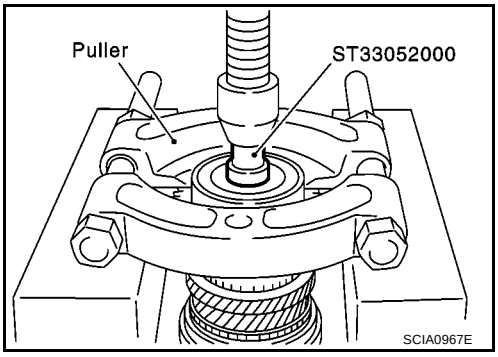

5. Remove 6th input gear, 6th bushing and 6th needle bearing.
6. Remove 6th baulk ring, 5th-6th coupling sleeve and shifting insert.

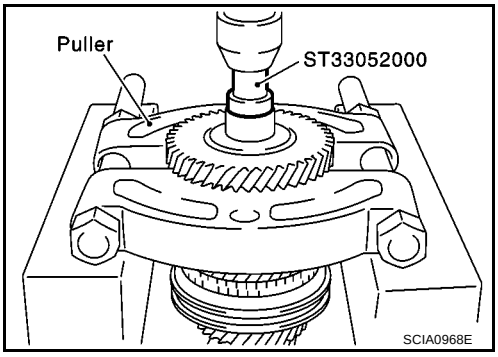

7. Remove 5th input gear and 5th synchronizer hub assembly simultaneously.
8. Remove 5th needle bearing.

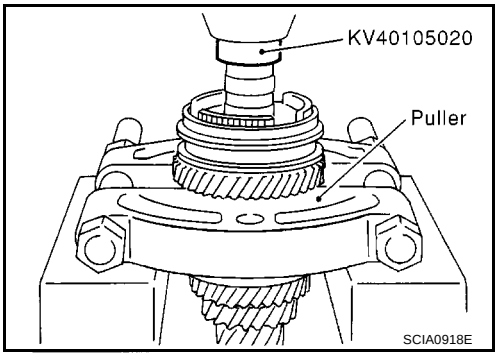

9. Remove 5th bushing, thrust washer, 4th input gear, 4th needle bearing, 4th bushing, 4th baulk ring, 3rd-4th synchronizer hub assembly, 3rd baulk ring and 3rd input gear simultaneously.
10. Remove 3rd needle bearing.

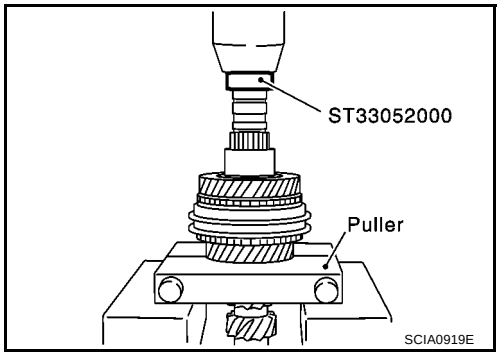

11. Remove input shaft front bearing.

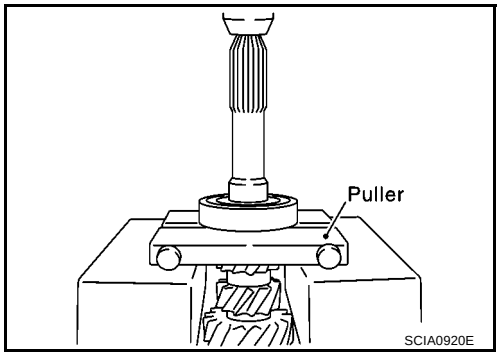

INSPECTION AFTER DISASSEMBLY

Input Shaft and Gear

Check items below. If necessary, replace them with new ones.

- Damage, peeling, dent, uneven wear, bending, etc. of shaft
- Excessive wear, damage, peeling, etc. of gears

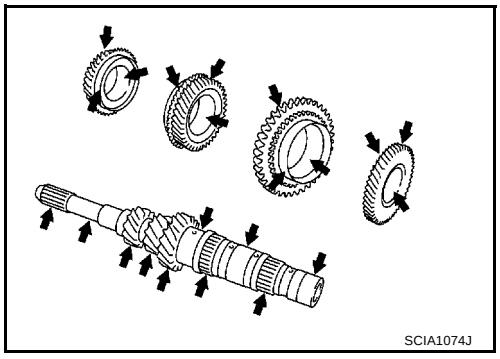

Synchronizer

Check items below. If necessary, replace them with new ones.

- Damage and excessive wear of contact surfaces of coupling sleeve, synchronizer hub, and shifting insert
- Coupling sleeve and synchronizer hub must move smoothly.

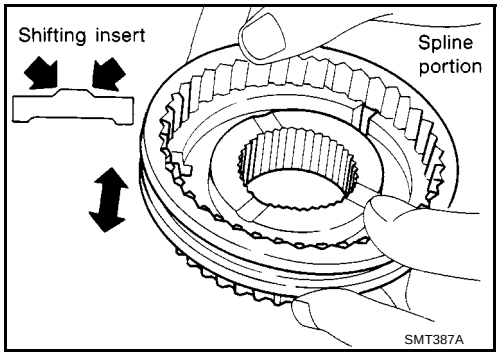

- If any crack, damage, or excessive wear is found on cam face of baulk ring or working face of insert, replace it.

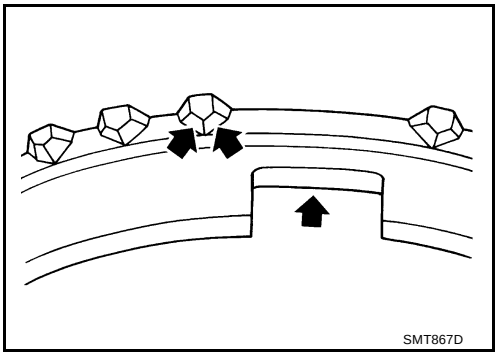

Baulk ring clearance

- Press baulk ring against cone, and measure clearance between baulk ring and cone. If measurement is below limit, replace it with a new one.

Clearance

Standard

3rd and 4th	**: 0.9 - 1.45 mm (0.0354 - 0.0571 in)**
5th and 6th	**: 0.95 - 1.4 mm (0.0374 - 0.0551 in)**
Limit value	**: 0.7 mm (0.0276 in)**

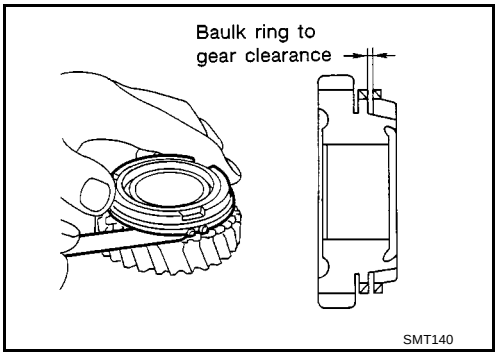

Bearing

Check items below. If necessary, replace them with new ones.

- Damage and rough rotation of bearing

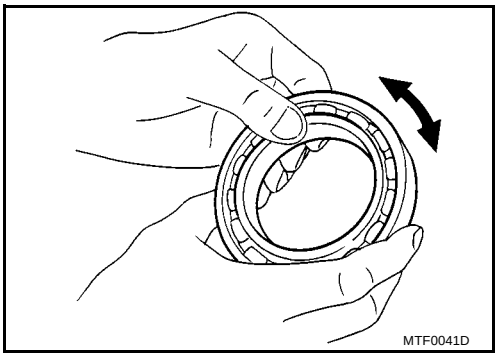

ASSEMBLY

1. Install 3rd needle bearing.
2. Install 3rd input gear and 3rd baulk ring.
3. Install spread spring, shifting insert and 3rd-4th synchronizer hub onto 3rd-4th coupling sleeve.

   CAUTION:
   - **Be careful with orientation of synchronizer hub.**
   - **Do not reuse 3rd-4th synchronizer hub.**

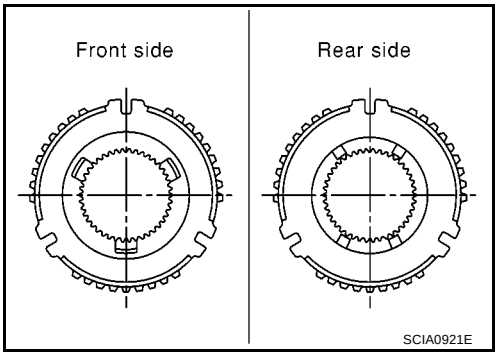

- **Be careful with orientation of coupling sleeve.**

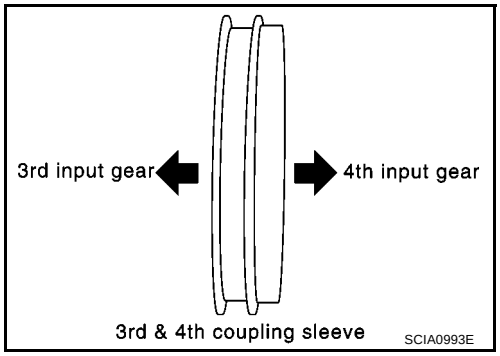

- **Be sure not to hook center projection of 2 spread springs on same shifting insert.**

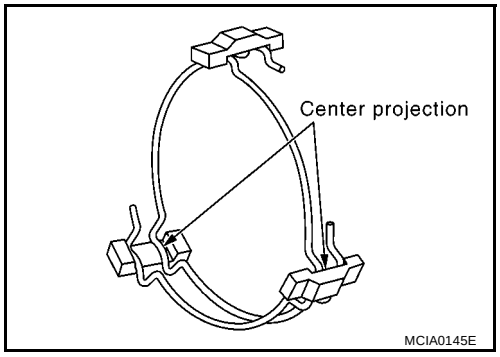

4. Install 3rd-4th synchronizer hub assembly.

   CAUTION:

   Align grooves of shifting insert and 3rd baulk ring.

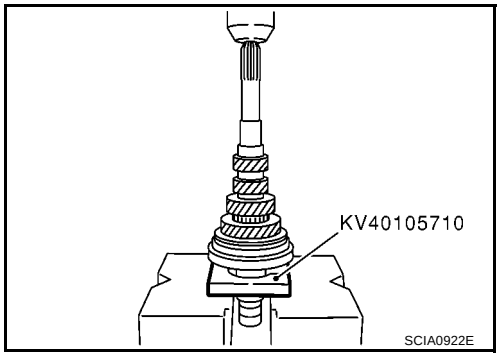

5. Install 4th bushing.
6. Install 4th baulk ring.
7. Install 4th input gear and 4th needle bearing.

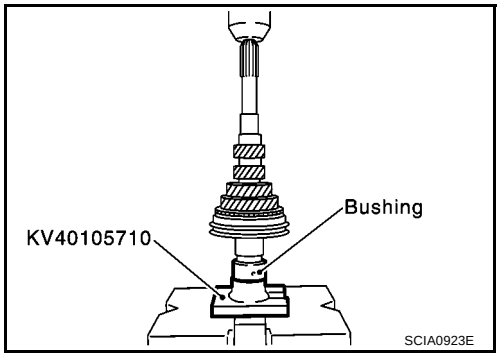

8. Select thrust washer so that dimension “C2” satisfies standard below. Then install it onto input shaft.

   Standard for dimension C2 : 154.7 - 154.8 mm (6.091 - 6.094 in)

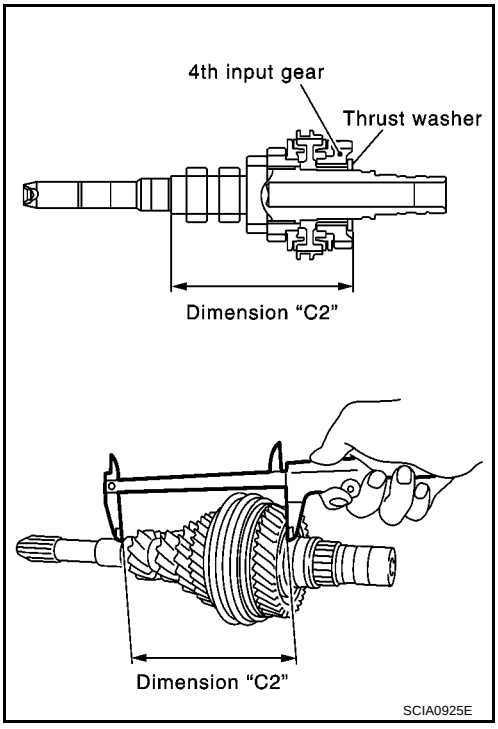

Thrust Washer

Thickness	Part number	Thickness	Part number
3.84 mm (0.1512 in)	32347 8H500	4.02 mm (0.1583 in)	32347 8H503
3.90 mm (0.1535 in)	32347 8H501	4.08 mm (0.1606 in)	32347 8H504
3.96 mm (0.1559 in)	32347 8H502	4.14 mm (0.1630 in)	32347 8H505

CAUTION:
Only one thrust wahser can be selected.

9. Install 5th bushing.
10. Install 5th needle bearing and 5th input gear.
11. Install 5th baulk ring.

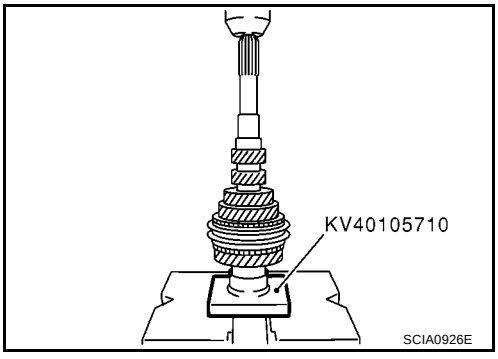

12. Install 5th-6th synchronizer hub, spread spring and shifting insert onto 5th-6th coupling sleeve.

    CAUTION:
    - **Be careful with orientation of synchronizer hub.**
    - **Do not reuse 5th-6th synchronizer hub.**

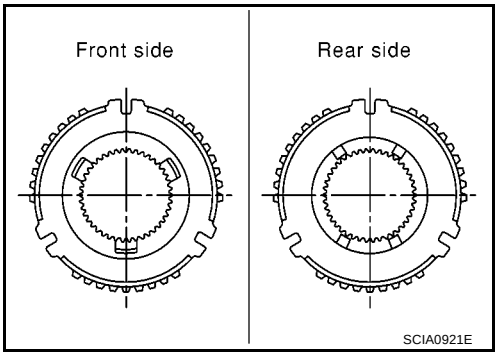

- **Be sure not to hook center projection of 2 spread springs on same shifting insert.**

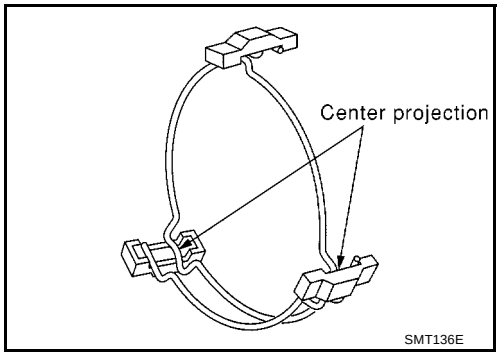

13. Install 5th-6th synchronizer hub assembly.

    CAUTION:
    Align grooves of 5th-6th shifting insert and 5th-6th baulk ring.

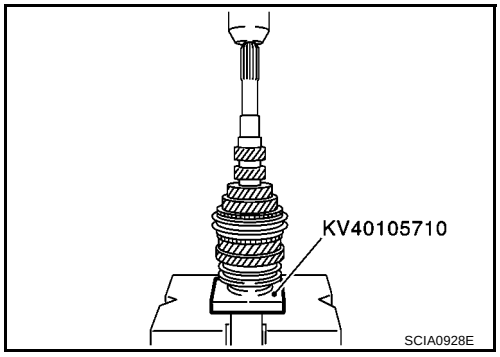

14. Install 6th needle bearing, 6th input gear onto 6th bushing, and then install them onto input shaft.

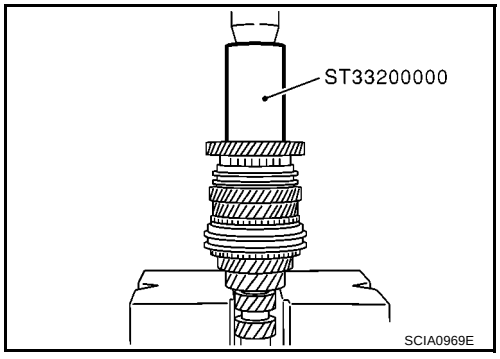

15. Install snap ring onto input shaft, and check that end play (gap between snap ring and groove) of 6th bushing satisfies standard.

    End play standard value : 0 - 0.1 mm (0 - 0.004 in)

    - If measurement is outside the standard range, select snap ring.

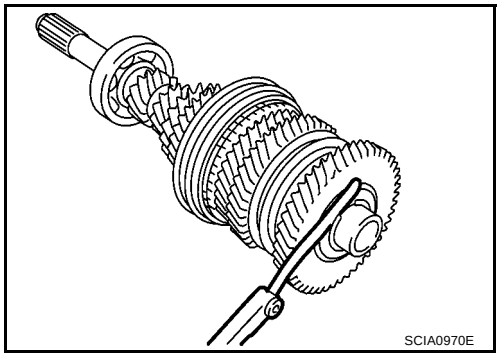

Snap Rings

Thickness	Part number	Thickness	Part number
1.76 mm (0.0693 in)	32204 8H511	2.01 mm (0.0791 in)	32204 8H516
1.81 mm (0.0713 in)	32204 8H512	2.06 mm (0.0811 in)	32204 8H517
1.86 mm (0.0732 in)	32204 8H513	2.11 mm (0.0831 in)	32204 8H518
1.91 mm (0.0752 in)	32204 8H514	2.16 mm (0.0850 in)	32204 8H519
1.96 mm (0.0772 in)	32204 8H515	2.21 mm (0.0870 in)	32204 8H520

16. Install input shaft rear bearing.

    CAUTION:
    Install input shaft rear bearing with its brown surface facing the 6th input gear side.

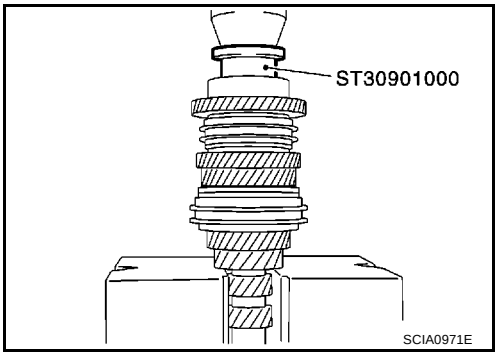

17. Install input shaft front bearing.
18. Install oil channel onto input shaft.

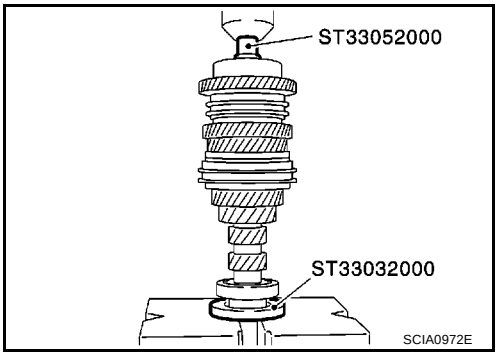

19. Check end play of 3rd, 4th, 5th and 6th input gears.

    End play standard value

    3rd gear : 0.18 - 0.31 mm (0.0071 - 0.0122 in)
    4th gear : 0.20 - 0.30 mm (0.0079 - 0.0118 in)
    5th gear : 0.06 - 0.16 mm (0.0024 - 0.0063 in)
    6th gear : 0.06 - 0.16 mm (0.0024 - 0.0063 in)

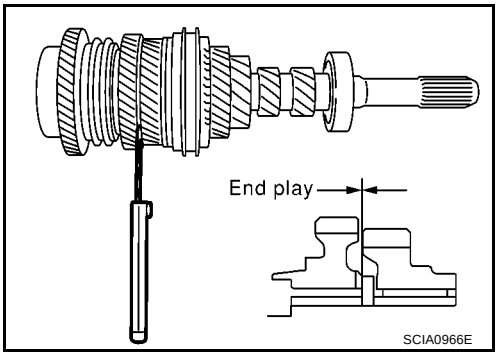

MAINSHAFT AND GEARS

PFP:32241

Assembly and Disassembly

ECS0095Y

DISASSEMBLY

1. Before disassembling, measure end play of 1st and 2nd main gears.

   End play standard value

   1st gear : 0.20 - 0.30 mm (0.0079 - 0.0118 in)

   2nd gear : 0.06 - 0.16 mm (0.0024 - 0.0063 in)

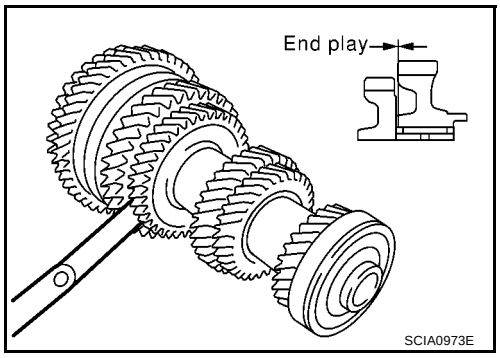

2. Remove the snap ring.
3. Remove C-ring holder, and then mainshaft C-ring.

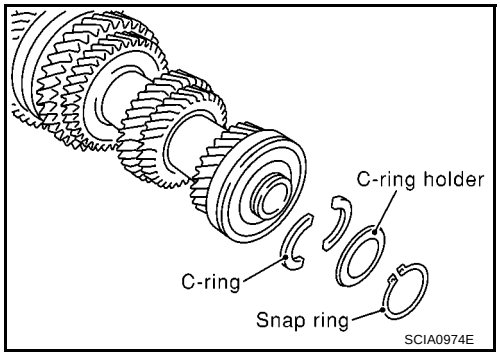

4. Remove mainshaft rear bearing, adjust shim and 6th main gear.
5. Remove 5th-6th mainshaft spacer.

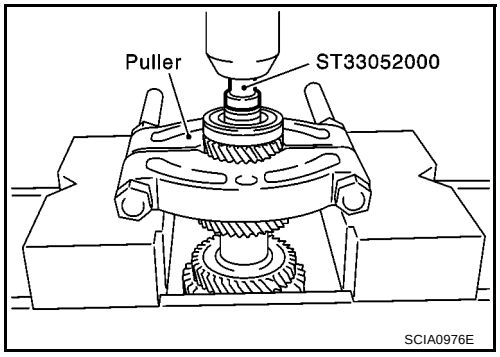

6. Remove 4th main gear and 5th main gear simultaneously.
7. Remove adjusting shim.
8. Remove 3rd & 4th mainshaft spacer.

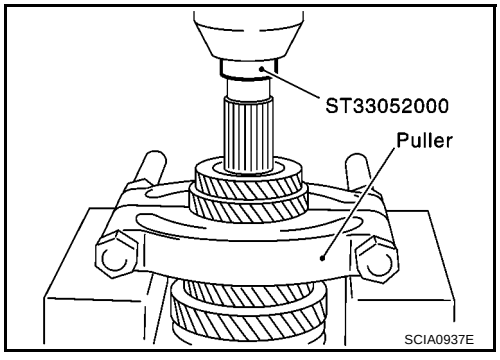

9. Remove 3rd main gear, 2nd main gear, 2nd gear needle bearing, 2nd bushing, 1st-2nd synchronizer assembly, 1st main gear, reverse main gear, 1st gear needle bearing, and 1st bushing simultaneously.

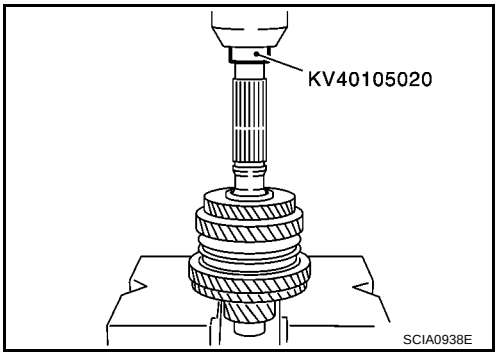

INSPECTION AFTER DISASSEMBLY

Mainshaft and Gears

Check items below. If necessary, replace them with new ones.

- Damage, peeling, dent, uneven wear, bending, and other non-standard conditions of the shaft.
- Excessive wear, damage, peeling, and other non-standard conditions of the gears.

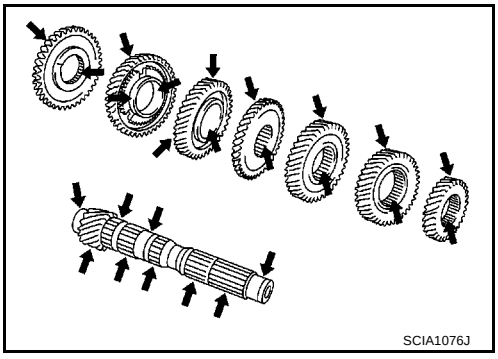

Synchronizer

Check items below. If necessary, replace them with new ones.

- Damage and unusual wear on contact surfaces of coupling sleeve, synchronizer hub, and shifting insert.
- Coupling sleeve and synchronizer hub must move smoothly.

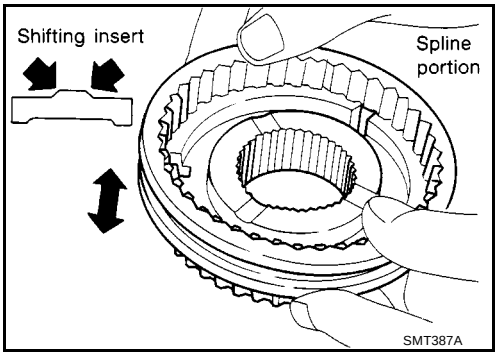

- If any crack, damage, or excessive wear is found on cam face of baulk ring or working face of insert, replace it.

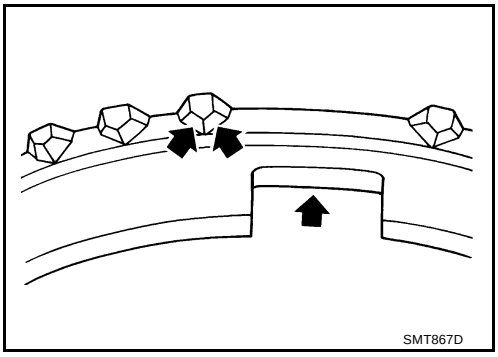

Baulk ring clearance

- Double cone synchronizer (1st and 2nd)
  Check clearance of outer baulk ring, synchronizer cone, and inner baulk ring of 1st and 2nd double cone synchronizers, following procedure below.

  CAUTION:
  Outer baulk ring, synchronizer cone, and inner baulk ring as a set control clearance A and B. If measurement exceeds service limit value, replace all of them as a set.

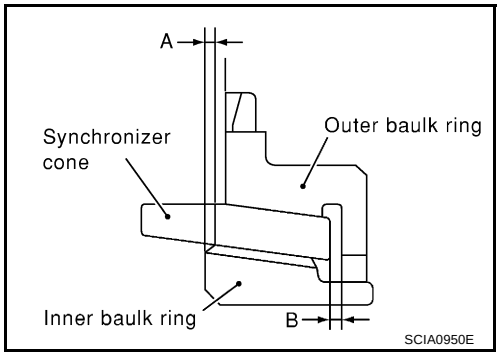

1. Using a dial gauge, measure clearance A at 2 or more points diagonally opposite, and calculate mean value.

   Clearance A

   Standard : 0.6 - 0.8 mm (0.024 - 0.031 in)
   Limit value : 0.2 mm (0.008 in) or less

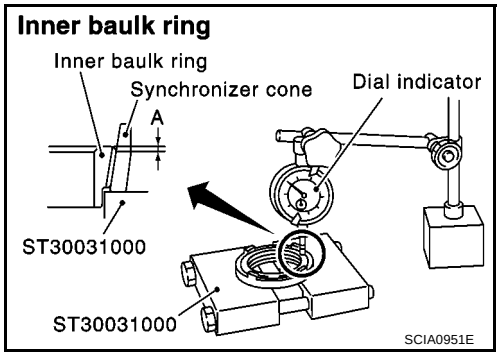

2. Using a feeler gauge, measure clearance B at 2 or more points diagonally opposite, and calculate mean value.

   Clearance B

   Standard : 0.6 - 1.1 mm (0.024 - 0.043 in)
   Limit value : 0.2 mm (0.008 in) or less

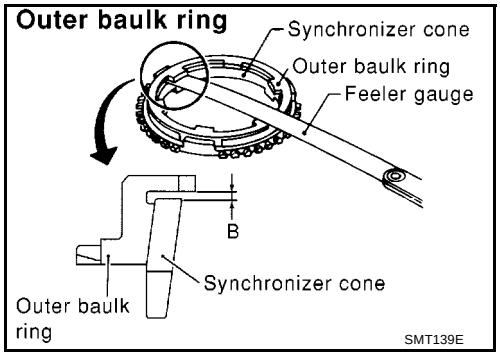

Bearing

Check items below. If necessary, replace them with new ones.

- Damage and rough rotation of bearing

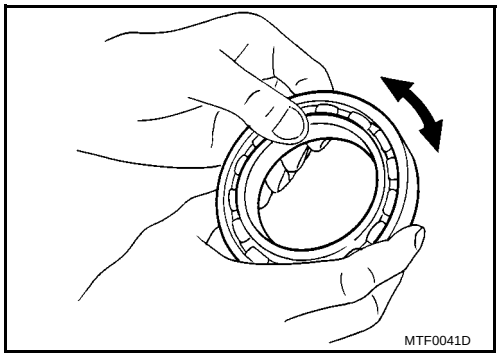

ASSEMBLY

1. Install reverse main gear.

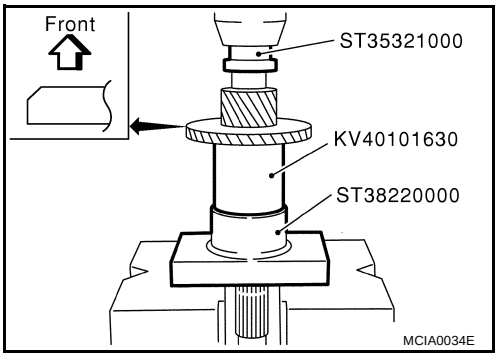

CAUTION:
Be careful with orientation of reverse main gear.

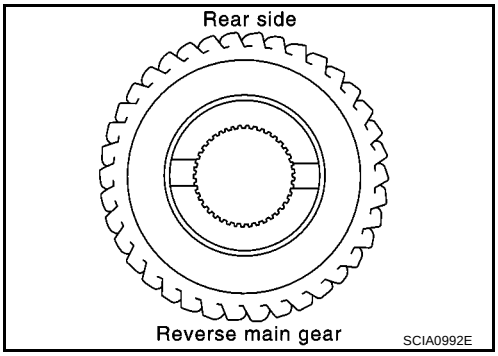

2. Install 1st bushing.
3. Install needle bearing, and then 1st main gear.

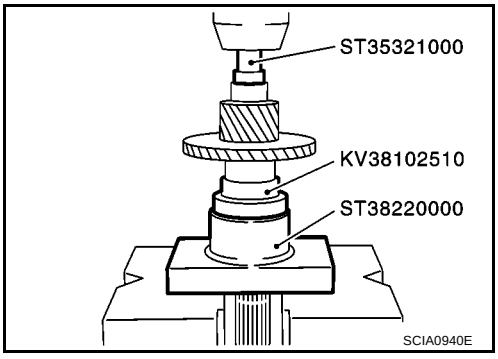

4. Install spread spring, shifting insert and 1st-2nd synchronizer hub onto 1st-2nd coupling sleeve.

CAUTION:
- **Be careful with orientation of synchronizer hub.**
- **Do not reuse 1st-2nd synchronizer hub.**

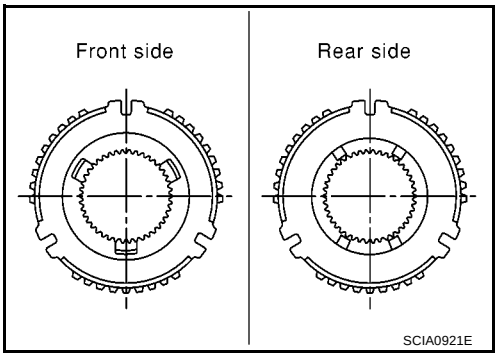

- **Be careful with orientation of coupling sleeve.**

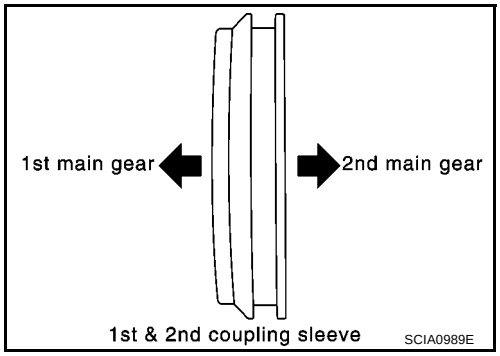

- **Be sure not to hook center projection of 2 spread springs on same shifting insert.**

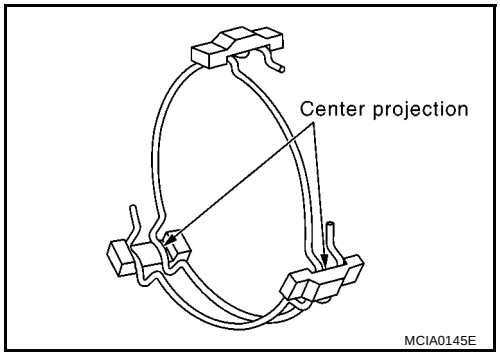

5. Install 1st gear synchronizer assembly onto mainshaft, and synchronizer hub assembly onto mainshaft.

   CAUTION:
   - **Outer baulk ring, synchronizer cone, and inner baulk ring on 2nd gear-side must have been removed.**
   - **Be careful with orientation of coupling sleeve.**

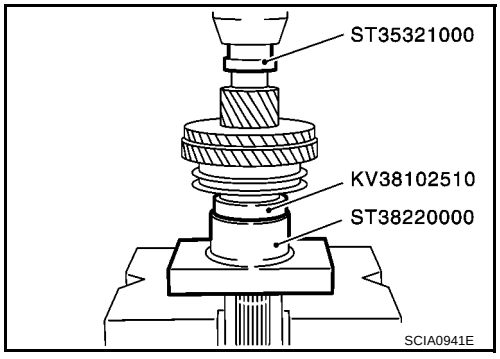

6. Install 2nd bushing.
7. Install outer baulk ring, synchronizer cone, and inner baulk ring on 2nd gear-side.
8. Install 2nd needle bearing and 2nd gear.

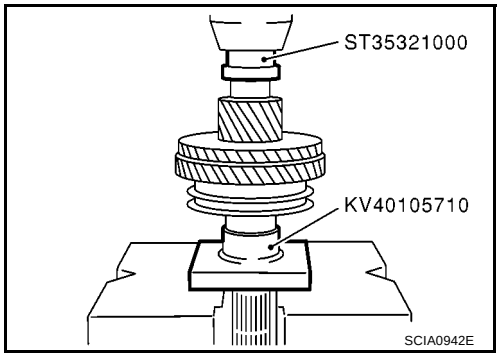

9. Install 3rd main gear.

CAUTION:
Be careful with orientation of 3rd main gear.

10. Install 3rd-4th mainshaft spacer.

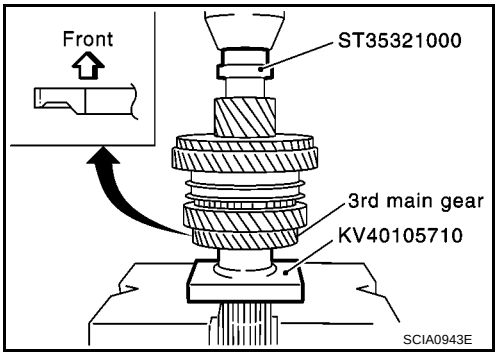

11. Select suitable adjusting shim so that dimension “C1” satisfies standard value below, and install it onto mainshaft.

Standard for dimension C1 : 173.85 - 173.95 mm (6.844 - 6.848 in)

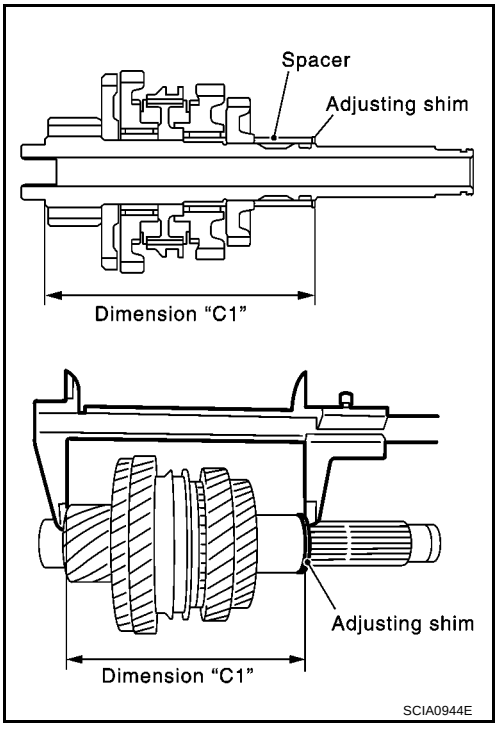

Adjusting Shim

Thickness	Part number	Thickness	Part number
0.52 mm (0.0205 in)	32238 8H500	0.84 mm (0.0331 in)	32238 8H504
0.60 mm (0.0236 in)	32238 8H501	0.92 mm (0.0362 in)	32238 8H505
0.68 mm (0.0268 in)	32238 8H502	1.00 mm (0.0394 in)	32238 8H506
0.76 mm (0.0299 in)	32238 8H503	1.08 mm (0.0425 in)	32238 8H507

CAUTION:
Only one adjusting shim can be selected.

12. Install 4th main gear.

CAUTION:
Be careful with orientation of 4th main gear.

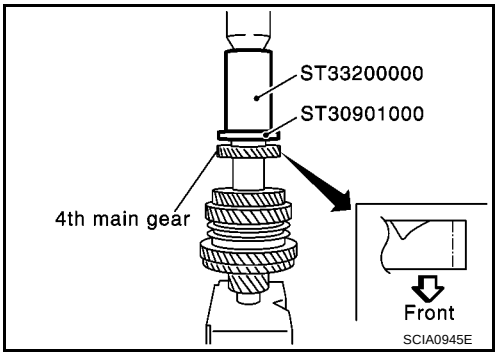

13. Install 5th main gear.

CAUTION:
Be careful with orientation of 5th main gear.

14. Install 5th-6th mainshaft spacer.

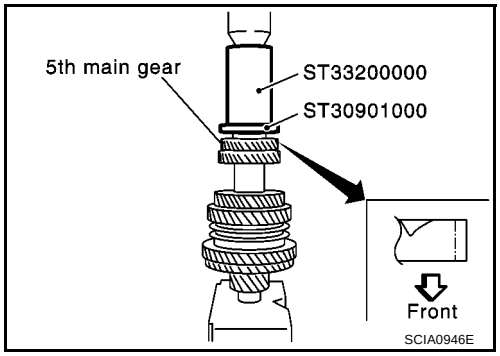

15. Install 6th main gear.

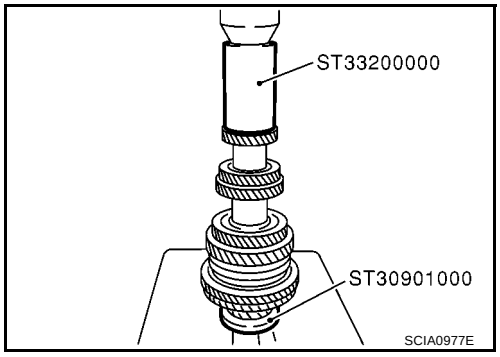

16. Select 6th main adjusting shim and then install it onto mainshaft.
    - Calculate thickness “S” of 6th main adjusting shim by procedure below so that end play dimension between 6th main gear and mainshaft rear bearing becomes the dimension shown below.

End play : 0 - 0.1 mm (0 - 0.004 in)

Dimension “S” = (S_1 – S_2) + End play

S : Thickness of adjusting shim

S_1 : Dimension from mainshaft standard face to mainshaft rear bearing press-fit end face

S_2 : Dimension from mainshaft standard face to 6th main gear end face

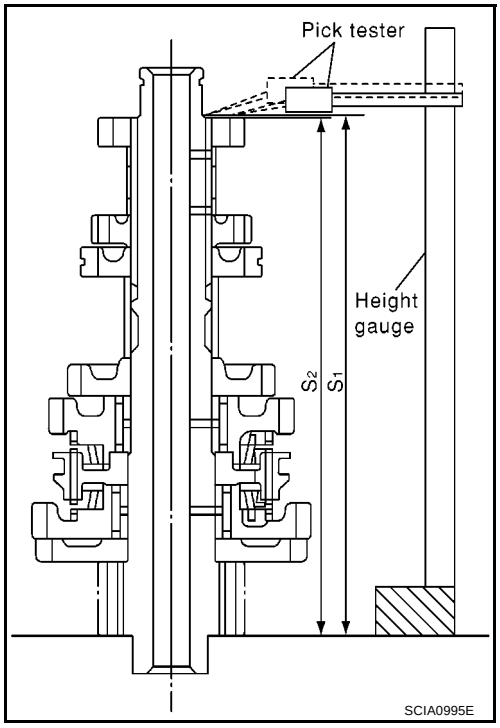

Adjusting Shim

Thickness	Part number	Thickness	Part number
0.88 mm (0.0346 in)	32237 8H560	1.20 mm (0.0472 in)	32237 8H564
0.96 mm (0.0378 in)	32237 8H561	1.28 mm (0.0504 in)	32237 8H565
1.04 mm (0.0409 in)	32237 8H562	1.36 mm (0.0535 in)	32237 8H566
1.12 mm (0.0441 in)	32237 8H563		

CAUTION:
Only one adjusting shim can be selected.

a. Using height gauge, measure dimension “S_1 ” and “S_2 ”.

b. Install selected 6th main adjusting shim to mainshaft.

17. Install mainshaft rear bearing.

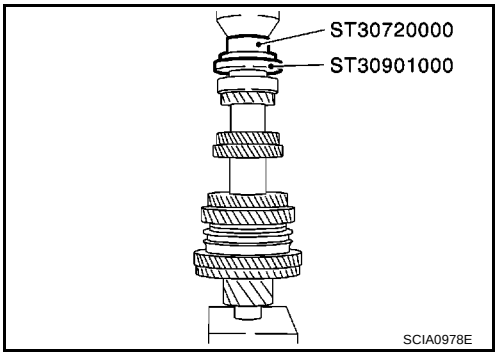

18. Install C-ring onto mainshaft, and check that end play of mainshaft rear bearing satisfies standard value.

End play standard value : 0 - 0.06 mm (0 - 0.0024 in)

- If measurement is outside the standard range, reselect C-ring.

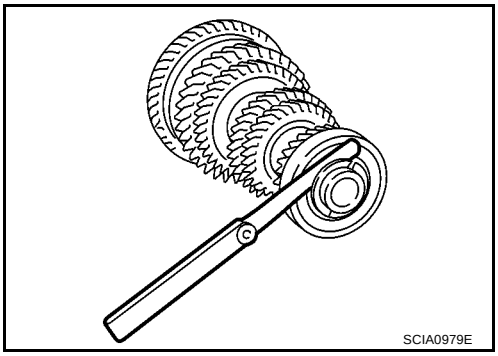

C-ring

Thickness	Part number	Thickness	Part number
2.535 mm (0.0998 in)	32348 8H800	2.835 mm (0.1116 in)	32348 8H810
2.565 mm (0.1010 in)	32348 8H801	2.865 mm (0.1128 in)	32348 8H811
2.595 mm (0.1022 in)	32348 8H802	2.895 mm (0.1140 in)	32348 8H812
2.625 mm (0.1033 in)	32348 8H803	2.925 mm (0.1152 in)	32348 8H813
2.655 mm (0.1045 in)	32348 8H804	2.955 mm (0.1163 in)	32348 8H814
2.685 mm (0.1057 in)	32348 8H805	2.985 mm (0.1175 in)	32348 8H815
2.715 mm (0.1069 in)	32348 8H806	3.015 mm (0.1187 in)	32348 8H816
2.745 mm (0.1081 in)	32348 8H807	3.045 mm (0.1199 in)	32348 8H817
2.775 mm (0.1093 in)	32348 8H808	3.075 mm (0.1211 in)	32348 8H818
2.805 mm (0.1104 in)	32348 8H809		

19. Fit C-ring holder, and install snap ring.

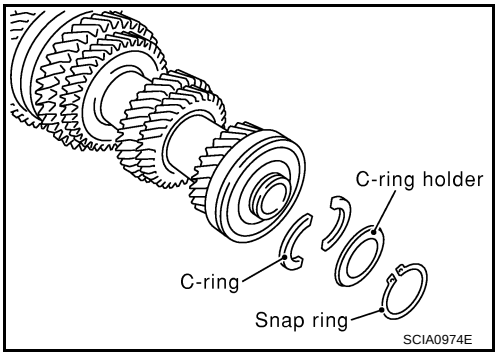

20. Check end play of 1st and 2nd main gears.

End play standard value

1st gear : 0.20 - 0.30 mm (0.0079 - 0.0118 in)

2nd gear : 0.06 - 0.16 mm (0.0024 - 0.0063 in)

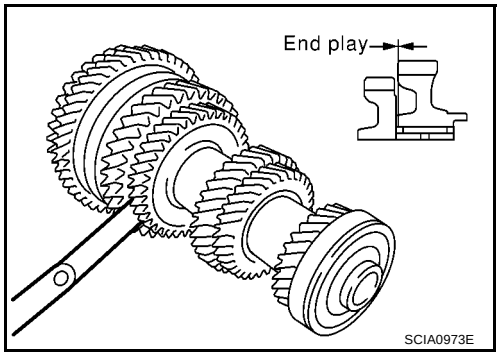

REVERSE IDLER SHAFT AND GEARS

PFP:32281

Assembly and Disassembly

ECS0095Z

DISASSEMBLY

1. Remove reverse idler gear adjusting shim.
2. Remove reverse idler gear (rear), reverse coupling sleeve and insert spring simultaneously.
3. Remove reverse idler gear needle bearing.
4. Remove thrust needle bearing.
5. Remove reverse baulk ring.
6. Remove reverse idler gear (front).
7. Remove reverse idler gear needle bearing.
8. Remove thrust needle bearing.
9. Pull off locking pin from reverse idler shaft.

INSPECTION AFTER DISASSEMBLY

Reverse Idler Shaft and Gears

Check items below. If necessary, replace them with new ones.

- Damage, peeling, dent, uneven wear, bending, and other non-standard conditions of the shaft.
- Excessive wear, damage, peeling, and other non-standard conditions of the gears.

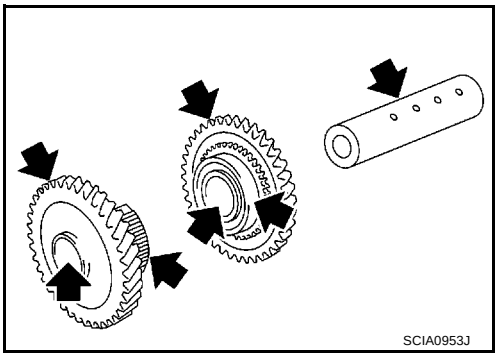

Synchronizer

Check items below. If necessary, replace them with new ones.

- Damage and unusual wear on contact surfaces of coupling sleeve, synchronizer hub, and insert spring.
- Coupling sleeve and synchronizer hub must move smoothly.

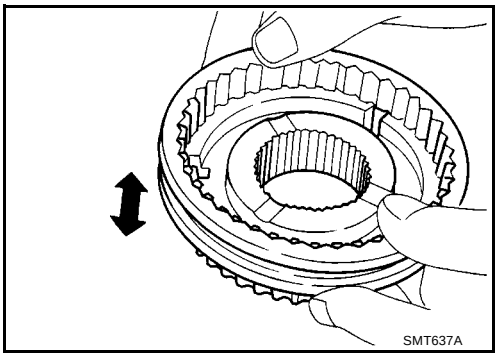

- If any crack, damage, or excessive wear is found on cam face of baulk ring or working face of insert, replace it.

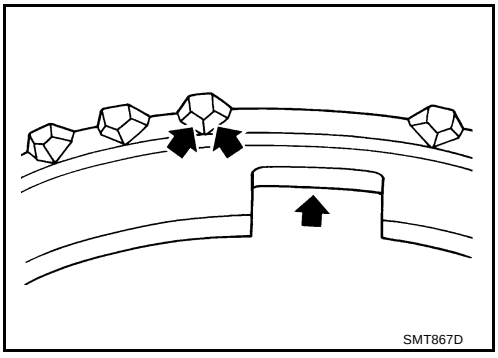

Baulk ring clearance

- Press baulk ring against cone, and measure clearance between baulk ring and cone. If measurement is below limit, replace it with a new one.

Clearance

Standard	**: 0.95 - 1.4 mm (0.0374 - 0.0551 in)**
Limit value	**: 0.7 mm (0.0276 in)**

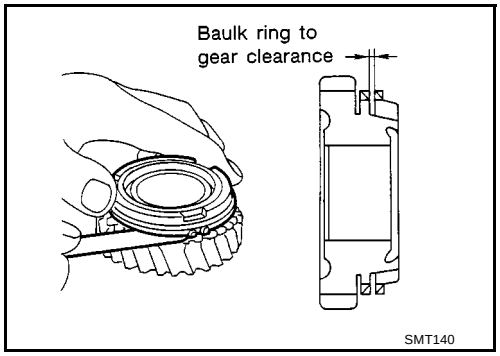

Bearing

Check items below. If necessary, replace them with new ones.

- Damage and rough rotation of bearing.

ASSEMBLY

Paying attention to following work, assemble in reverse order of disassembly.

CAUTION:

- **Be careful with orientation of insert spring.**

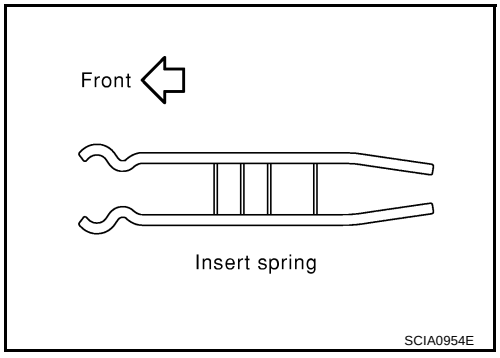

FINAL DRIVE

PFP:38411

Assembly and Disassembly

ECS00960

PRE-INSPECTION

- Check the clearance between side gear and differential case as follows.

1. Clean final drive assembly sufficiently to prevent side gear thrust washer, differential case, side gear, and other parts from sticking by gear oil.

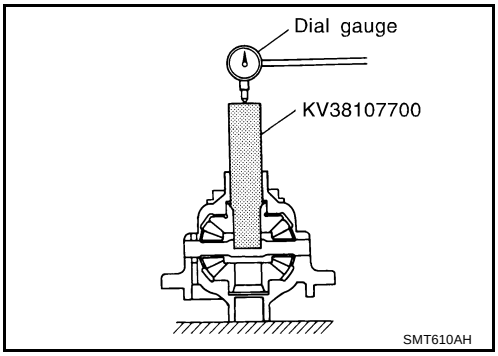

2. Upright the differential case so that the side gear to be measured faces upward.
3. Place final drive adapter and dial gauge onto side gear. Move side gear up and down, and measure the clearance.

Clearance between side gear and differential case	**: 0.1 - 0.2 mm (0.004 - 0.008 in)**

CAUTION:
There should be no resistance and gears should rotate freely.

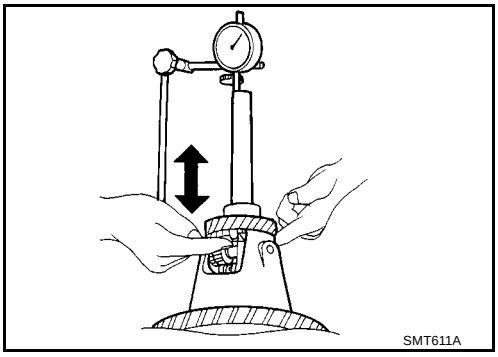

4. If not within specification, adjust the clearance by changing thrust washer thickness.
5. Turn differential case upside down, and measure the clearance between side gear and differential case on the other side in the same way.

DISASSEMBLY

1. Remove mounting bolts. Then, separate the final gear from differential case.
2. Remove speedometer drive gear.
3. Using a drift and puller, remove differential side bearing (clutch housing side).

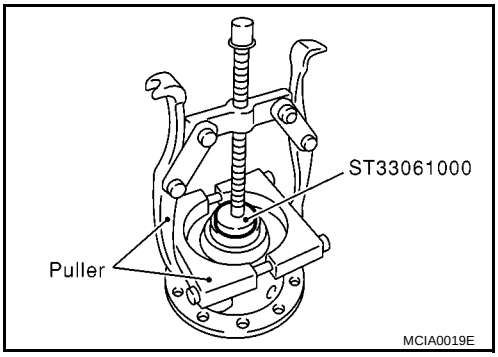

4. Using a drift and puller, remove differential side bearing (transaxle case side).

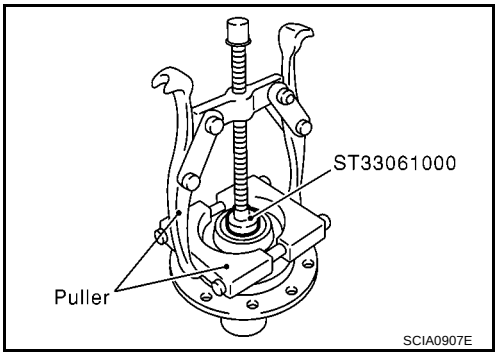

5. Using a pin punch, pull out lock pin and pinion mate shaft.
6. Rotate pinion mate gears, and remove pinion mate gears, pinion mate thrust washers, side gears, and side gear thrust washers from differential case.

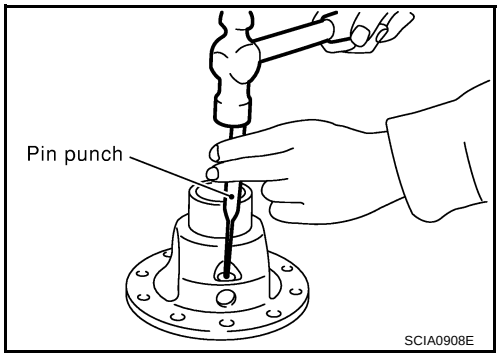

INSPECTION AFTER DISASSEMBLY

Gear Washer, Shaft and Case

- Check side gears, side gear thrust washers, pinion mate shaft, pinion mate gears, pinion mate thrust washers and differential case. If necessary, replace with a new one.

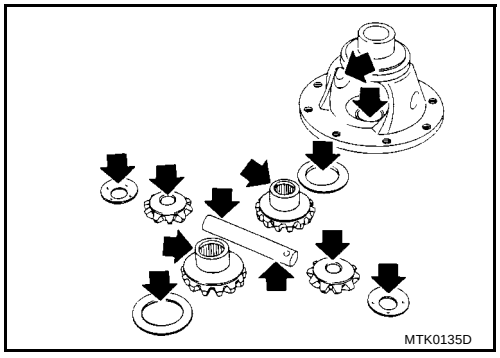

Bearing

- Check for bearing damage and rough rotation. If necessary, replace with a new one.

  CAUTION:
  When replacing tapered roller bearing, replace outer and inner race as a set.

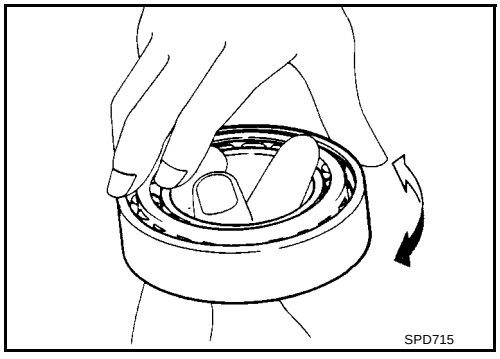

ASSEMBLY

1. Apply gear oil to sliding area of differential case, each gear, and thrust washer.
2. Install side gear thrust washer and side gears into differential case.
3. While rotating pinion mate thrust washers and pinion mate gears, aligning them diagonally, install them into differential case.

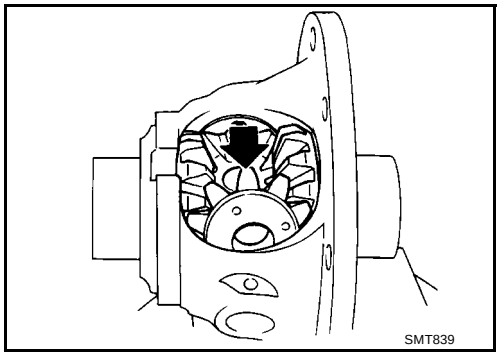

4. Insert pinion mate shaft into differential case.

CAUTION:
Be sure not to damage pinion mate thrust washers.

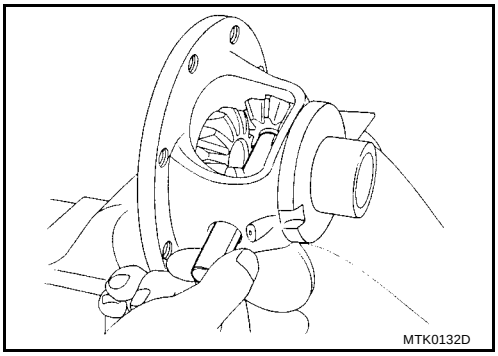

5. Measure end play of side gears following procedure below. Then select side gear thrust washer.

a. Upright the differential case so that its side gear to be measured face upward.

b. Place final drive adapter and dial gauge onto side gears.

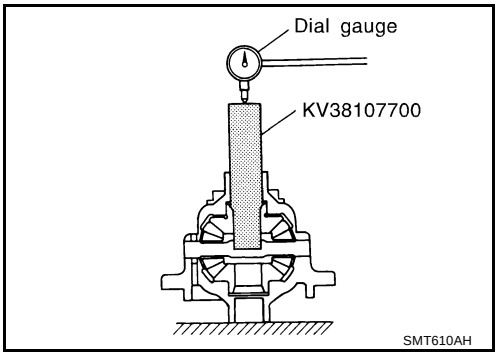

c. Move side gears up and down to measure end play, and select thrust washer so that it satisfies standard.

End play standard value : 0.1 - 0.2 mm (0.004 - 0.008 in)

CAUTION:
- **There should be no resistance and gears should rotate freely.**
- **Place differential case upside down. Be sure to measure end play for opposite side-gears likewise.**

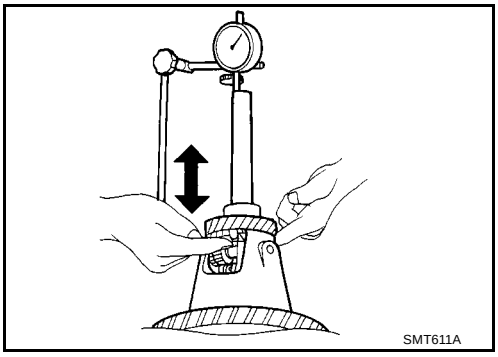

Thrust washer

Shim thickness	Part number
0.75 mm (0.0295 in)	38424 81X00
0.80 mm (0.0315 in)	38424 81X01
0.85 mm (0.0335 in)	38424 81X02
0.90 mm (0.0354 in)	38424 81X03
0.95 mm (0.0374 in)	38424 81X04

CAUTION:
Only one thrust washer can be selected.

6. Using a pin punch (special service tool), drive a lock pin into the pinion mate shaft.

CAUTION:
Do not reuse the lock pin.

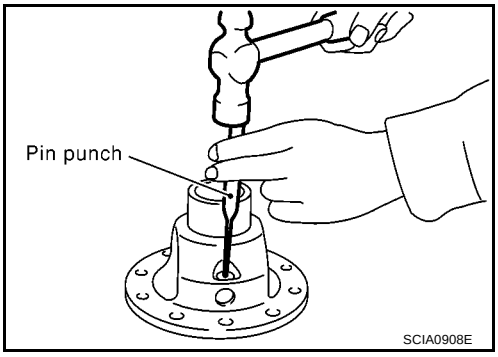

7. Using a drift (special service tool), install differential side bearing (transaxle case side).

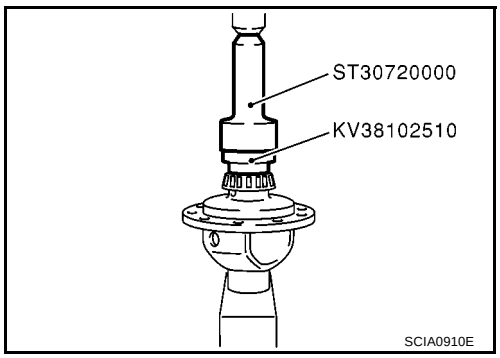

8. Align and install speedometer drive gear onto differential case.

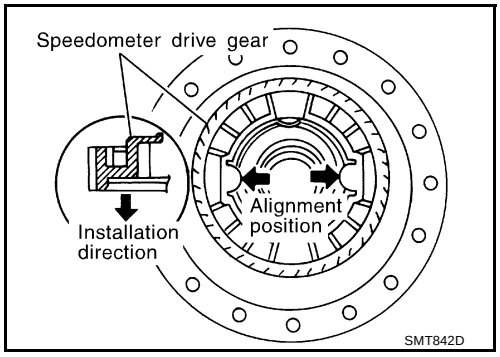

9. Using a drift (special service tool), install differential side bearing (clutch housing side).

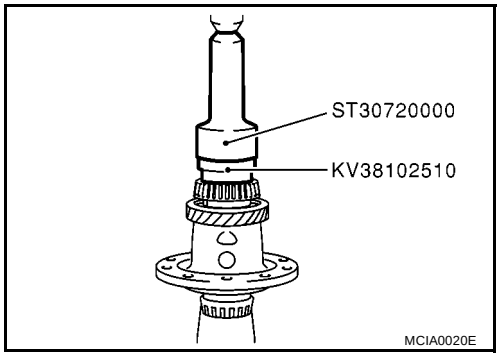

10. Install final gear into differential case, and tighten final gear mounting bolts.

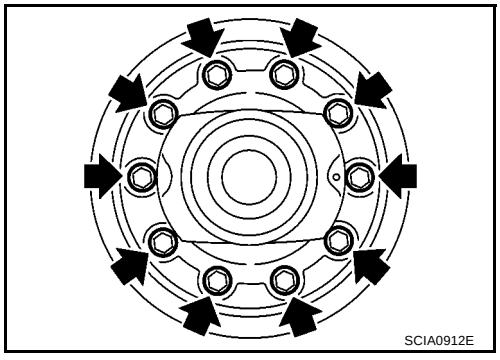

SHIFT CONTROL

PFP:32982

Inspection

ECS00961

- Check contact surfaces and sliding area for wear, damage, bending, etc. If necessary, replace parts.

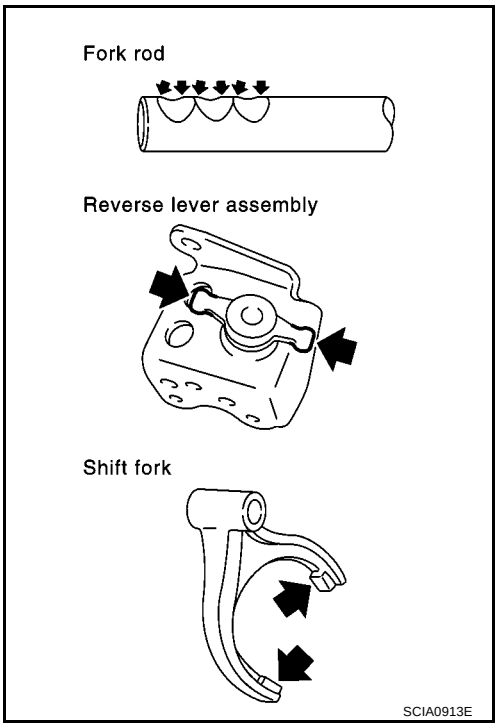

SHIFT FORK

- Check if the width of shift fork hook (sliding area with coupling sleeve) is within allowable specification below.

Item	One-side wear specification	Sliding width of new part
1st & 2nd	0.2 mm (0.008 in)	7.80 - 7.93 mm (0.3071 - 0.3122 in)
3rd & 4th	0.2 mm (0.008 in)	7.80 - 7.93 mm (0.3071 - 0.3122 in)
5th & 6th	0.2 mm (0.008 in)	6.10 - 6.23 mm (0.2402 - 0.2453 in)
Reverse	0.2 mm (0.008 in)	12.80 - 12.93 mm (0.5039 - 0.5091 in)

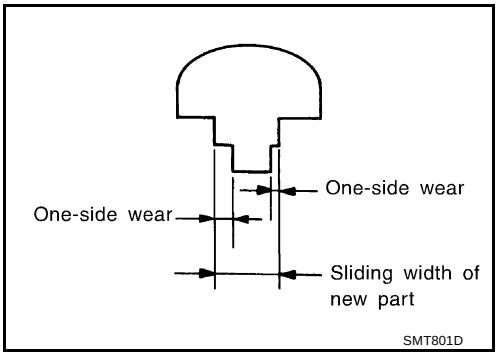

SERVICE DATA AND SPECIFICATIONS (SDS)

PFP:00030

General Specifications

ECS00962

TRANSAXLE

Engine			YD22DDTi
Transaxle model			RS6F51R
Model code number			AW664
Number of speed			6
Synchromesh type			Warner
Shift pattern			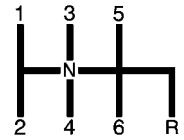 SCIA0955E
Gear ratio	1st		3.500
	2nd		1.944
	3rd		1.258
	4th		0.947
	5th		0.722
	6th		0.673
	Reverse		3.374
Number of teeth	Input gear	1st	14
		2nd	18
		3rd	31
		4th	38
		5th	44
		6th	49
		Reverse	14
	Main gear	1st	49
		2nd	35
		3rd	39
		4th	36
		5th	34
		6th	33
		Reverse	38
	Reverse idler gear	Front	37
		Rear	46
Oil capacity ℓ (Imp pt)			2.3 (4)
Remarks	Reverse synchronizer		Installed
	Double baulk ring type synchro-nizer		1st & 2rd synchronizer

FINAL GEAR

Engine	YD22DDTi
Transaxle model	RS6F51R
Model code number	AW664

Final gear ratio		3.812
Number of teeth	Final gear/Pinion	61/16
	Side gear/Pinion mate gear	14/11

*: Refer to MA section, “RECOMMENDED FLUIDS AND LUBRICANTS”.

Gear End Play

ECS00963

Unit: mm (in)

Gear	End play
1st main gear	0.20 - 0.30 (0.0079 - 0.0118)
2nd main gear	0.06 - 0.16 (0.0024 - 0.0063)
3rd input gear	0.18 - 0.31 (0.0071 - 0.0122)
4th input gear	0.20 - 0.30 (0.0079 - 0.0118)
5th input gear	0.06 - 0.16 (0.0024 - 0.0063)
6th input gear	0.06 - 0.16 (0.0024 - 0.0063)

Clearance Between Baulk Ring and Gear

ECS00964

3RD, 4TH, 5TH, 6TH & REVERSE BAULK RING

Unit: mm (in)

Standard		Wear limit
3rd	0.9 - 1.45 (0.0354 - 0.0571)	0.7 (0.0276)
4th	0.9 - 1.45 (0.0354 - 0.0571)	
5th	0.95 - 1.4 (0.0374 - 0.0551)	
6th	0.95 - 1.4 (0.0374 - 0.0551)	
Reverse	0.95 - 1.4 (0.0374 - 0.0551)	

1ST AND 2ND DOUBLE BAULK RING

Unit: mm (in)

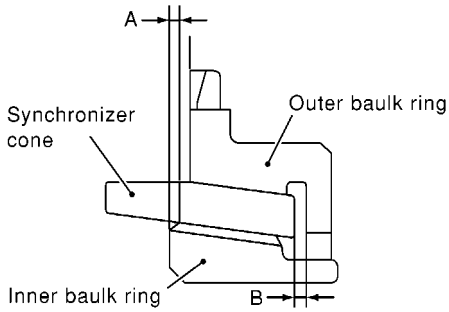

SMT138E

Dimension	Standard	Wear limit
A	0.6 - 0.8 (0.024 - 0.031)	0.2 (0.008)
B	0.6 - 1.1 (0.024 - 0.043)	

Available Snap Rings

ECS00965

6TH BUSHING

End play		0 - 0.1 mm (0 - 0.004 in)	
Thickness mm (in)	Part number*	Thickness mm (in)	Part number*
1.76 (0.0693)	32204 8H511	2.01 (0.0791)	32204 8H516
1.81 (0.0713)	32204 8H512	2.06 (0.0811)	32204 8H517
1.86 (0.0732)	32204 8H513	2.11 (0.0831)	32204 8H518
1.91 (0.0752)	32204 8H514	2.16 (0.0850)	32204 8H519
1.96 (0.0772)	32204 8H515	2.21 (0.0870)	32204 8H520

*: Always check with the Parts Department for the latest parts information.

Available C-rings

ECS00966

MAINSHAFT C-RING

End play		0 - 0.06 mm (0 - 0.0024 in)	
Thickness mm (in)	Part number*	Thickness mm (in)	Part number*
2.535 (0.0998)	32348 8H800	2.835 (0.1116)	32348 8H810
2.565 (0.1010)	32348 8H801	2.865 (0.1128)	32348 8H811
2.595 (0.1022)	32348 8H802	2.895 (0.1140)	32348 8H812
2.625 (0.1033)	32348 8H803	2.925 (0.1152)	32348 8H813
2.655 (0.1045)	32348 8H804	2.955 (0.1163)	32348 8H814
2.685 (0.1057)	32348 8H805	2.985 (0.1175)	32348 8H815
2.715 (0.1069)	32348 8H806	3.015 (0.1187)	32348 8H816
2.745 (0.1081)	32348 8H807	3.045 (0.1199)	32348 8H817
2.775 (0.1093)	32348 8H808	3.075 (0.1211)	32348 8H818
2.805 (0.1104)	32348 8H809		

*: Always check with the Parts Department for the latest parts information.

Available Thrust Washer

ECS00967

INPUT SHAFT THRUST WASHER

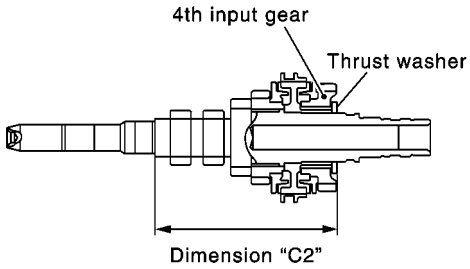

SCIA1008E

Standard length “C2”		154.7 - 154.8 mm (6.091 - 6.094 in)	
Thickness mm (in)	Part number*	Thickness mm (in)	Part number*
3.84 (0.1512)	32347 8H500	4.02 (0.1583)	32347 8H503
3.90 (0.1535)	32347 8H501	4.08 (0.1606)	32347 8H504
3.96 (0.1559)	32347 8H502	4.14 (0.1630)	32347 8H505

*: Always check with the Parts Department for the latest parts information.

DIFFERENTIAL SIDE GEAR THRUST WASHER

Allowable clearance between side gear and differential case with washer	0.1 - 0.2 mm (0.004 - 0.008 in)
Thickness mm (in)	Part number*
0.75 (0.0295)	38424 81X00
0.80 (0.0315)	38424 81X01
0.85 (0.0335)	38424 81X02
0.90 (0.0354)	38424 81X03
0.95 (0.0374)	38424 81X04

*: Always check with the Parts Department for the latest parts information.

Available Adjusting Shims

ECS00968

MAINSHAFT ADJUSTING SHIM

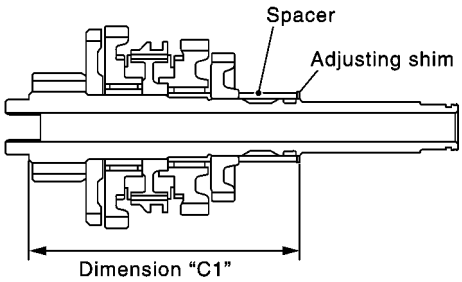

SCIA1009E

Standard length “C1”		173.85 - 173.95 mm (6.844 - 6.848 in)	
Thickness mm (in)	Part number*	Thickness mm (in)	Part number*
0.52 (0.0205)	32238 8H500	0.84 (0.0331)	32238 8H504
0.60 (0.0236)	32238 8H501	0.92 (0.0362)	32238 8H505
0.68 (0.0268)	32238 8H502	1.00 (0.0394)	32238 8H506
0.76 (0.0299)	32238 8H503	1.08 (0.0425)	32238 8H507

*: Always check with the Parts Department for the latest parts information.

INPUT SHAFT REAR BEARING ADJUSTING SHIM

End play			0 - 0.06 mm (0 - 0.0024 in)		
Thickness mm (in)	Part number*	Thickness mm (in)	Part number*	Thickness mm (in)	Part number*
0.40 (0.0157)	32225 8H500	0.88 (0.0346)	32225 8H512	1.36 (0.0535)	32225 8H524
0.44 (0.0173)	32225 8H501	0.92 (0.0362)	32225 8H513	1.40 (0.0551)	32225 8H560
0.48 (0.0189)	32225 8H502	0.96 (0.0378)	32225 8H514	1.44 (0.0567)	32225 8H561
0.52 (0.0205)	32225 8H503	1.00 (0.0394)	32225 8H515	1.48 (0.0583)	32225 8H562
0.56 (0.0220)	32225 8H504	1.04 (0.0409)	32225 8H516	1.52 (0.0598)	32225 8H563
0.60 (0.0236)	32225 8H505	1.08 (0.0425)	32225 8H517	1.56 (0.0614)	32225 8H564
0.64 (0.0252)	32225 8H506	1.12 (0.0441)	32225 8H518	1.60 (0.0630)	32225 8H565
0.68 (0.0268)	32225 8H507	1.16 (0.0457)	32225 8H519	1.64 (0.0646)	32225 8H566
0.72 (0.0283)	32225 8H508	1.20 (0.0472)	32225 8H520		
0.76 (0.0299)	32225 8H509	1.24 (0.0488)	32225 8H521		
0.80 (0.0315)	32225 8H510	1.28 (0.0504)	32225 8H522		
0.84 (0.0331)	32225 8H511	1.32 (0.0520)	32225 8H523		

*: Always check with the parts department for the latest information.

MAINSHAFT REAR BEARING ADJUSTING SHIM

End play		0 - 0.06 mm (0 - 0.0024 in)	
Thickness mm (in)	Part number*	Thickness mm (in)	Part number*
0.44 (0.0173)	32238 8H510	0.80 (0.0315)	32238 8H519
0.48 (0.0189)	32238 8H511	0.84 (0.0331)	32238 8H520
0.52 (0.0205)	32238 8H512	0.88 (0.0346)	32238 8H521
0.56 (0.0220)	32238 8H513	0.92 (0.0362)	32238 8H522
0.60 (0.0236)	32238 8H514	0.96 (0.0378)	32238 8H523
0.64 (0.0252)	32238 8H515	1.00 (0.0394)	32238 8H524
0.68 (0.0268)	32238 8H516	1.04 (0.0409)	32238 8H560
0.72 (0.0283)	32238 8H517	1.08 (0.0425)	32238 8H561
0.76 (0.0299)	32238 8H518		

*: Always check with the Parts Department for the latest parts information.

REVERSE IDLER GEAR ADJUSTING SHIM

End play	0.04 - 0.14 mm (0.0016 - 0.0055 in)

Thickness mm (in)	Part number*	Thickness mm (in)	Part number*
1.76 (0.0693)	32237 8H800	2.24 (0.0882)	32237 8H812
1.84 (0.0724)	32237 8H802	2.32 (0.0913)	32237 8H814
1.92 (0.0756)	32237 8H804	2.40 (0.0945)	32237 8H816
2.00 (0.0787)	32237 8H806	2.48 (0.0976)	32237 8H818
2.08 (0.0819)	32237 8H808	2.56 (0.1008)	32237 8H820
2.16 (0.0850)	32237 8H810	2.64 (0.1039)	32237 8H822

*: Always check with the Parts Department for the latest parts information.

6TH MAIN GEAR ADJUSTING SHIM

End play		0 - 0.1 mm (0 - 0.004 in)	
Thickness mm (in)	Part number*	Thickness mm (in)	Part number*
0.88 (0.0346)	32237 8H560	1.20 (0.0472)	32237 8H564
0.96 (0.0378)	32237 8H561	1.28 (0.0504)	32237 8H565
1.04 (0.0409)	32237 8H562	1.36 (0.0535)	32237 8H566
1.12 (0.0441)	32237 8H563		

*: Always check with the Parts Department for the latest parts information.

Available Shims

ECS00969

— Differential Side Bearing Preload and Adjusting Shim

BEARING PRELOAD

Differential side bearing preload: L*	0.15 - 0.21 mm (0.0059 - 0.0083 in)

*: Install shims which are “deflection of differential case” + “L” in thickness.

DIFFERENTIAL SIDE BEARING ADJUSTING SHIM (S)

Thickness mm (in)	Part number*	Thickness mm (in)	Part number*
0.48 (0.0189)	31438 80X00	0.72 (0.0283)	31438 80X06
0.52 (0.0205)	31438 80X01	0.76 (0.0299)	31438 80X07
0.56 (0.0220)	31438 80X02	0.80 (0.0315)	31438 80X08
0.60 (0.0236)	31438 80X03	0.84 (0.0331)	31438 80X09
0.64 (0.0252)	31438 80X04	0.88 (0.0346)	31438 80X10
0.68 (0.0268)	31438 80X05	0.92 (0.0362)	31438 80X11

*: Always check with the Parts Department for the latest parts information.